AS 2870—2011

Licensed to Mrs Cathie Thompson on 17 September 2012. 1 user personal user licence only. Storage, distribution or use on network prohibited (10300097).

Australian Standard®

Residential slabs and footings

STANDARDS Australia

Licensed to Mrs Cathie Thompson on 17 September 2012. 1 user personal user licence only. Storage, distribution or use on network prohibited (10300097).

This Australian Standard® was prepared by Committee BD-025, Residential Slabs and Footings. It was approved on behalf of the Council of Standards Australia on 20 December 2010. This Standard was published on 17 January 2011.

The following are represented on Committee BD-025:

- Australian Building Codes Board
- Australian Chamber of Commerce and Industry
- Australian Geomechanics Society
- Australian Institute of Building Surveyors
- Cement Concrete and Aggregates Australia
- Concrete Masonry Association of Australia
- Construction Industry Advisory Council
- Engineers Australia
- Foundations and Footings Society of Australia
- Housing Industry Association
- Master Builders Australia
- National Timber Development Council
- Plastics and Chemicals Industries Association
- Steel Reinforcement Institute of Australia
- Think Brick Australia
- University of Newcastle
- University of South Australia

This Standard was issued in draft form for comment as DR AS 2870.

Standards Australia wishes to acknowledge the participation of the expert individuals that contributed to the development of this Standard through their representation on the Committee and through the public comment period.

Keeping Standards up-to-date

Australian Standards® are living documents that reflect progress in science, technology and systems. To maintain their currency, all Standards are periodically reviewed, and new editions are published. Between editions, amendments may be issued.

Standards may also be withdrawn. It is important that readers assure themselves they are using a current Standard, which should include any amendments that may have been published since the Standard was published.

Detailed information about Australian Standards, drafts, amendments and new projects can be found by visiting **www.standards.org.au**

Standards Australia welcomes suggestions for improvements, and encourages readers to notify us immediately of any apparent inaccuracies or ambiguities. Contact us via email at **mail@standards.org.au**, or write to Standards Australia, GPO Box 476, Sydney, NSW 2001.

Licensed to Mrs Cathie Thompson on 17 September 2012. 1 user personal user licence only. Storage, distribution or use on network prohibited (10300097).

Australian Standard®

Residential slabs and footings

Originated as AS 2870—1986.
Previous editions AS 2870.1—1988 and AS 2870.2—1990.
Revised, amalgamated and redesignated AS 2870—1996.
AS 2870—1996 and AS 2870 Supp 1—1996 revised and published as AS 2870—2011.

COPYRIGHT

© Standards Australia Limited

All rights are reserved. No part of this work may be reproduced or copied in any form or by any means, electronic or mechanical, including photocopying, without the written permission of the publisher, unless otherwise permitted under the Copyright Act 1968.

Published by SAI Global Limited under licence from Standards Australia Limited, GPO Box 476, Sydney, NSW 2001, Australia

ISBN 978 0 7337 9756 9

Licensed to Mrs Cathie Thompson on 17 September 2012. 1 user personal user licence only. Storage, distribution or use on network prohibited (10300097).

PREFACE

This Standard was prepared by the Standards Australia Committee BD-025, Residential Slabs and Footings, to supersede AS 2870—1996.

The objective of this Standard is to specify performance criteria and specific designs for footing systems for foundation conditions commonly found in Australia and to provide guidance on the design of footing systems by engineering principles.

This Standard places particular emphasis on design for reactive clay sites susceptible to significant ground movement due to moisture changes. The Standard takes account of the following:

(a) Swelling and shrinkage movements of reactive clay soils due to moisture changes.

(b) Settlement of compressible soils or fill.

(c) Distribution to the foundation of the applied loads.

(d) Tolerance of the superstructure to movement.

Notes are included for clarification and general advice only and are not part of the mandatory provisions of the Standard.

Changes to the previous edition are as follows:

(a) Revision of the overall Standard.

(b) Site Class H split into Classes H1 and H2.

(c) New Appendix H Guide to design of footings for trees.

The terms 'normative' and 'informative' have been used in this Standard to define the application of the appendix to which they apply. A 'normative' appendix is an integral part of a Standard, whereas an 'informative' appendix is only for information and guidance.

The Figures in this Standard are intended to show only the structural proportions of the footing system. All other details are purely illustrative.

Commentary to this Standard has been included at the back of this document. The Commentary is for information and advice only, and does not form part of the mandatory body of the Standard.

The layout of the Commentary follows that of the Standard. The numbering differs only in that its clauses, figures and tables are prefixed by the letter 'C', e.g. Clause C3.2.1 of this Commentary refers to Clause 3.2.1 of the Standard. Where there is no commentary to a Clause of the Standard it does not appear, therefore the Clause numbers in this Commentary are not consecutive. References to various publications and papers are listed as the last item of the Section or Appendix in which they occur. Section C7 provides recommendations not given in the Standard.

The Commentary is for information and advice only.

Licensed to Mrs Cathie Thompson on 17 September 2012. 1 user personal user licence only. Storage, distribution or use on network prohibited (10300097).

CONTENTS

Page

SECTION 1 SCOPE AND GENERAL
1.1 SCOPE 5
1.2 APPLICATION 5
1.3 PERFORMANCE OF FOOTING SYSTEMS 6
1.4 DESIGN CONDITIONS 7
1.5 DEEMED-TO-COMPLY STANDARD DESIGNS 8
1.6 ARTICULATION REQUIREMENTS 8
1.7 NORMATIVE REFERENCES 8
1.8 DEFINITIONS 9
1.9 NOTATION 13
1.10 REINFORCEMENT DESIGNATION 15
1.11 INFORMATION IN DOCUMENTS 16

SECTION 2 SITE CLASSIFICATION
2.1 GENERAL 17
2.2 METHODS FOR SITE CLASSIFICATION 18
2.3 ESTIMATION OF THE CHARACTERISTIC SURFACE MOVEMENT 20
2.4 SITE INVESTIGATION REQUIREMENTS 23
2.5 ADDITIONAL CONSIDERATIONS FOR SITE CLASSIFICATION 24

SECTION 3 STANDARD DESIGNS
3.1 SELECTION OF FOOTING SYSTEMS 26
3.2 STIFFENED RAFT 28
3.3 FOOTING SLAB 31
3.4 WAFFLE RAFTS 33
3.5 STIFFENED SLAB WITH DEEP EDGE BEAM 35
3.6 STRIP FOOTINGS 36
3.7 REINFORCEMENT EQUIVALENCES 39
3.8 SUSPENDED CONCRETE FLOORS IN ONE-STOREY CONSTRUCTION 40
3.9 FOOTING SYSTEMS FOR TWO-STOREY CONSTRUCTION WITH SUSPENDED CONCRETE FLOOR 40
3.10 FOOTINGS FOR CONCENTRATED LOADS 40

SECTION 4 DESIGN BY ENGINEERING PRINCIPLES
4.1 GENERAL 41
4.2 DESIGN CRITERIA 41
4.3 DESIGN OF FOOTING SYSTEMS 41
4.4 STIFFENED RAFT FOOTING SYSTEMS 41
4.5 SIMPLIFIED METHOD FOR RAFT DESIGNS 43
4.6 DESIGN OF FOOTING SYSTEMS OTHER THAN STIFFENED RAFTS 44
4.7 FOOTING SYSTEMS FOR REINFORCED SINGLE–LEAF MASONRY WALLS 45
4.8 DESIGN FOR PILED OR PIERED FOOTING SYSTEMS 45

SECTION 5 DETAILING REQUIREMENTS
5.1 GENERAL 46
5.2 DRAINAGE DESIGN REQUIREMENTS 46
5.3 REQUIREMENTS FOR RAFTS AND SLABS 47
5.4 REQUIREMENTS FOR PAD AND STRIP FOOTINGS 53

5.5 REQUIREMENTS IN AGGRESSIVE SOILS 54
5.6 ADDITIONAL REQUIREMENTS FOR CLASSES M, H1, H2 AND E SITES 58

SECTION 6 CONSTRUCTION REQUIREMENTS
6.1 GENERAL 60
6.2 PERMANENT EXCAVATIONS 60
6.3 TEMPORARY EXCAVATIONS 60
6.4 CONSTRUCTION OF SLABS 60
6.5 CONSTRUCTION OF STRIP AND PAD FOOTINGS 66
6.6 ADDITIONAL REQUIREMENTS FOR MODERATELY, HIGHLY AND EXTREMELY REACTIVE SITES 66

APPENDICES
A FUNCTIONS OF VARIOUS PARTIES 68
B FOUNDATION PERFORMANCE AND MAINTENANCE 69
C CLASSIFICATION OF DAMAGE DUE TO FOUNDATION MOVEMENTS 72
D SITE CLASSIFICATION BY SOIL PROFILE IDENTIFICATION 74
E STUMP PAD SIZES, BRACED STUMP UPLIFT HORIZONTAL LOAD CAPACITY 79
F SOIL STRUCTURE INTERACTION ANALYSIS FOR STIFFENED RAFTS 83
G DEEP FOOTINGS 86
H GUIDE TO DESIGN OF FOOTINGS FOR TREES 90
I BIBLIOGRAPHY 93

COMMENTARY TO AS 2870—2011 96

Licensed to Mrs Cathie Thompson on 17 September 2012. 1 user personal user licence only. Storage, distribution or use on network prohibited (10300097).

STANDARDS AUSTRALIA

Australian Standard
Residential slabs and footings

SECTION 1 SCOPE AND GENERAL

1.1 SCOPE

This Standard sets out the criteria for the classification of a site and the design and construction of a footing system for a single dwelling house, townhouse or similar structure which may be detached or separated by a party wall or common wall, but not situated vertically above or below another dwelling, including buildings classified as Class 1 and Class 10a in the Building Code of Australia.

The Standard may also be used for other forms of construction, including some light industrial, commercial and institutional buildings if they are similar to houses in size, loading and superstructure flexibility. The footing systems for which designs are given include slab on ground, stiffened rafts, waffle rafts, strip footings, pad footings and piled footings.

NOTE: This Standard gives no advice on detailing of the connection of superstructures to the footing systems for wind loads or earthquake loads.

For design purposes, the life of the structure is taken to be 50 years.

NOTES:

1 This Standard has been widely used for a number of years for the economical design of footings and slabs. Economical designs that avoid significant damage are practicable only if the soil moisture content of the foundation material under the footing or slab is stable or within reasonable limits of stability over the design life of the house or structure. For all sites (in particular sites with reactive soils) drainage and soil moisture conditions around the building need to be managed to avoid abnormal moisture conditions, as outlined in Clause 1.3.3, which may result in building damage.

2 Site management recommendations are given in Appendix B.

3 Where slab on ground construction is used for long slabs and large houses, particular consideration in design may be needed to avoid significant damage.

4 Information on earthquake actions is included in AS 1170.4. Information on wind actions is included in AS/NZS 1170.2 and AS 4055.

1.2 APPLICATION

To comply with this Standard—

(a) all sites shall be classified in accordance with Section 2; and

(b) footing system design shall be by either—

  (i) prescribing a standard design in accordance with Section 3; or

  (ii) applying the engineering principles described in Section 4; and

(c) all design and construction shall comply with Sections 5 and 6.

Residential footing system design, detailing and construction shall also comply with AS 3600 except that, where in conflict, this Standard (AS 2870) shall take precedence.

NOTE: The functions of the various parties included in the design and construction of residential slabs and footings are normally as described in Appendix A.

Licensed to Mrs Cathie Thompson on 17 September 2012. 1 user personal user licence only. Storage, distribution or use on network prohibited (10300097).

Licensed to Mrs Cathie Thompson on 17 September 2012. 1 user personal user licence only. Storage, distribution or use on network prohibited (10300097).

1.3 PERFORMANCE OF FOOTING SYSTEMS

1.3.1 General

Buildings supported by footing systems designed and constructed in accordance with this Standard on a normal site (see Clause 1.3.2) that is—

(a) not subject to abnormal moisture conditions; and

(b) maintained such that the original site classification remains valid and abnormal moisture conditions do not develop (see Note 1);

are expected to experience usually no damage, a low incidence of damage category 1 and an occasional incidence of damage category 2 (see Note 2).

Classification of damage shall be as defined in Appendix C.

NOTES:

1 Appendix B provides information and guidance on the maintenance of site foundation conditions.

2 Class A sites (as defined in Section 2) are not reactive to moisture and may have a lesser risk of damage to buildings constructed thereon.

1.3.2 Normal sites

Normal sites are those that are classified as one of Classes A, S, M, H1, H2 and E in accordance with Section 2 of this Standard and where foundation moisture variations are those caused by seasonal and regular climatic effects, effect of the building and subdivision, and normal garden conditions without abnormal moisture conditions (see Clause 1.3.3).

NOTES:

1 The application of the recommendations in Appendix B is expected to provide normal garden conditions.

2 Normal sites can be expected to be adversely impacted by irregular climatic effects—this could include prolonged droughts.

1.3.3 Abnormal moisture conditions

Abnormal moisture conditions are those that result in foundation moisture variations beyond those for normal sites (see Clause 1.3.2). Buildings constructed on sites subject to abnormal moisture conditions have a higher probability of damage than those described in Clause 1.3.1.

In the following examples, the identified factor may result in abnormal moisture conditions where the feature is sufficiently close to affect the ground moisture under the building and/or the event was sufficiently recent that the effect on ground moisture will be present at the time of construction.

Examples of abnormal moisture conditions existing prior to construction include the following:

(a) Removal of an existing building or structure likely to have significantly modified the soil moisture conditions under the footprint of the footing system of the building.

(b) Removal of trees prior to construction.

(c) Presence of trees on the building site or adjacent site.

(d) Unusual moisture conditions caused by drains, channels, ponds, dams, swimming pools, effluent disposal areas or tanks, which are to be maintained or removed from the site.

Examples of abnormal moisture conditions resulting from construction include the following:

(i) Failure to provide adequate site drainage.

(ii) Failure to detail or construct drainage in accordance with this Standard.

Examples of abnormal moisture conditions developing after construction include the following:

(A) The effect of trees too close to a footing.

(B) Excessive or irregular watering of gardens adjacent to the building.

(C) Failure to maintain site drainage.

(D) Failure to repair plumbing leaks.

(E) Loss of vegetation from near the building.

NOTE: Advice related to the effect of trees on footings is included in Appendix H.

1.4 DESIGN CONDITIONS

1.4.1 General

The design conditions specified in Clauses 1.4.2 and 1.4.3 for beams and slabs supported by the foundation on normal sites shall apply.

For other than normal sites, the design of the footing system shall be by engineering principles to ensure the footings perform in accordance with Clause 1.3. Design considerations that are particular to the site shall be considered.

1.4.2 Design action effects

Design for serviceability and safety against structural failure or bearing failure shall be based on design actions due to—

(a) permanent action plus 0.5 imposed action; and

(b) foundation movement.

The permanent and imposed actions to be resisted shall be in accordance with AS/NZS 1170.1.

Foundation movement shall be assessed as the movement that has less than 5% chance of being exceeded in the life of the building, which is taken to be 50 years.

Design soil suction profiles shall be based on this concept and the values of soil suction given in Section 2 are deemed to comply with this requirement.

Design for uplift shall be based on design action effects due to 0.9 permanent action plus wind action.

NOTE: For the wind actions to be resisted, see AS/NZS 1170.2 or AS 4055.

Reactive soil movements and soil settlements shall be determined from permanent action plus 0.5 imposed action.

Soil parameters shall be taken as mean values for each soil stratum.

Design bearing capacity, including uplift, shall be not more than 0.33 multiplied by the ultimate bearing pressure. Design bearing capacity shall take into consideration both the site conditions and the ability of the building system to accommodate load-related settlement.

1.4.3 Other design considerations

The design of footing systems shall consider the following:

(a) Effective drainage of the site.

(b) Past satisfactory performance of similar footings on similar sites.

(c) Control, but not prevention, of shrinkage cracking.

Licensed to Mrs Cathie Thompson on 17 September 2012. 1 user personal user licence only. Storage, distribution or use on network prohibited (10300097).

(d) Control, but not prevention, of cracking due to footing movement.

(e) Stiffness and ductility of the footing system.

(f) Strength of the wall system.

(g) Tolerance of the wall system to movement.

(h) Foundation bearing properties.

1.5 DEEMED-TO-COMPLY STANDARD DESIGNS

The standard designs given in Section 3 are deemed to comply with the performance criteria in Clause 1.3.

1.6 ARTICULATION REQUIREMENTS

Where the standard designs given in Section 3 are for articulated masonry veneer and articulated full masonry, articulation joints shall comply with the requirements of AS/NZS 4773.2 and TN 61.

1.7 NORMATIVE REFERENCES

The following are the normative documents referenced in this Standard.

NOTE: Documents referenced for informative purposes are listed in Appendix I.

AS

1289	Methods of testing soils for engineering purposes
1289.6.3.3	Method 6.3.3: Soil strength and consolidation tests—Determination of the penetration resistance of a soil—Perth sand penetrometer test
1289.7.1.1	Method 7.1.1: Soil reactivity tests—Determination of the shrinkage index of a soil—Shrink swell index
1289.7.1.2	Method 7.1.2: Soil reactivity tests—Determination of the shrinkage index of a soil—Loaded shrinkage index
1289.7.1.3	Method 7.1.3: Soil reactivity tests—Determination of the shrinkage index of a soil—Core shrinkage index
1379	Specification and supply of concrete
1684	Residential timber-framed construction series
3600	Concrete structures
3700	Masonry structures
3798	Guidelines on earthworks for commercial and residential developments
3799	Liquid membrane forming curing compounds for concrete

AS/NZS

1170	Structural design actions
1170.1	Part 1: Permanent, imposed and other actions
2904	Damp-proof courses and flashings
4347	Damp-proof courses and flashings—Methods of test
4347.6	Method 6: Determining impact resistance (falling dart impact test)
4347.9	Method 9: Determining thickness
4671	Steel reinforcing materials
4773	Masonry in small buildings
4773.1	Part 1: Design
4773.2	Part 2: Construction

Licensed to Mrs Cathie Thompson on 17 September 2012. 1 user personal user licence only. Storage, distribution or use on network prohibited (10300097).

Australian Building Codes Board
BCA Building Code of Australia

Cement Concrete and Aggregates Australia
TN 61 Articulated walling

CSIRO
Method for the determination of the penetration resistance of water vapour barriers to falling aggregate

1.8 DEFINITIONS

For the purposes of this Standard, the definitions below apply.

1.8.1 Articulated full masonry

Full masonry construction incorporating articulation of external and internal walls.

1.8.2 Articulated masonry veneer

Masonry veneer construction incorporating articulation of the masonry veneer.

1.8.3 Articulation

Provision for movement in walls through incorporation of permanent control joints.

1.8.4 Braced stump

Stump that forms part of a bracing element that resists lateral loads through diagonal members attached between two or more stumps.

1.8.5 Bracing stump

Stump that, in addition to vertical loads, resists horizontal loads applied more than 150 mm above ground level.

1.8.6 Bored pier

Cast in place concrete cylindrical load support element.

1.8.7 Bulk pier

Cast in place concrete load support element excavated by backhoe or similar machinery.

1.8.8 Characteristic surface movement (y_s)

Movement of the surface of a reactive site caused by moisture changes from characteristic dry to characteristic wet condition in the absence of a building and without consideration of load effects.

1.8.9 Clad frame

Timber or metal frame construction with the exterior wall clad with timber or sheet material not sensitive to minor movements. Includes substructure masonry walls up to 1.5 m high.

1.8.10 Clay

Fine-grained soil with plastic properties when wet. Includes gravelly, sandy or silty clays.

1.8.11 Collapsing soil

Weakly cemented soil subject to large settlements under load as a result of degradation by water on the cementing action.

1.8.12 Concrete wall panel

Precast (including tilt-up) or cast in place concrete wall designed to act as a unit and separated from adjacent panels or walls by a control joint.

Licensed to Mrs Cathie Thompson on 17 September 2012. 1 user personal user licence only. Storage, distribution or use on network prohibited (10300097).

Licensed to Mrs Cathie Thompson on 17 September 2012. 1 user personal user licence only. Storage, distribution or use on network prohibited (10300097).

1.8.13 Controlled fill

Fill that will be required to support structures or associated pavements, or for which engineering properties are to be controlled.

1.8.14 Design bearing capacity

The maximum bearing pressure that can be sustained by the foundation from the proposed footing system under service loads over the design range of soil moisture conditions.

1.8.15 Earth wall construction

Unfired earth bricks or blocks and unfired rammed earth wall construction.

1.8.16 Edge beam

Beam at the edge of a slab on ground or stiffened raft.

1.8.17 Edge footing

Footing at the edge of a footing slab.

1.8.18 Engineering principles

Principles of geotechnical and structural engineering as applicable for the purposes of this Standard.

NOTE: This means engineering principles that are commonly accepted by qualified engineers.

1.8.19 Extension

Additional construction abutting an existing building.

1.8.20 Fill depth

For a slab, depth measured from the underside of the footing to the natural surface level. For a strip or pad footing system, depth measured from the finished ground level to the natural surface level.

1.8.21 Finished ground level

Ground level adjacent to the footing system at the completion of construction and landscaping.

1.8.22 Fitment

Tie, ligature or stirrup reinforcement.

1.8.23 Footing

Construction that transfers the load from the building to the foundation.

1.8.24 Footing slab

Concrete floor supported on the ground with a separately poured edge strip footing.

1.8.25 Footing system

General term used to refer to slabs, footings, piers and pile systems that transfer load from the superstructure to the foundation.

1.8.26 Foundation

Ground that supports the footing system.

1.8.27 Framed double-leaf masonry

Construction with masonry double-leaf external wall and framed internal walls.

Licensed to Mrs Cathie Thompson on 17 September 2012. 1 user personal user licence only. Storage, distribution or use on network prohibited (10300097).

1.8.28 Full masonry

Construction with masonry double-leaf external walls and masonry single-leaf internal walls without full articulation.

1.8.29 Gilgai

Soil surface feature associated with reactive clay sites, characterized by regularly spaced and sized depressions on virgin land.

NOTE: Gilgais are formed by extreme, reactive soil movements. Soil profiles may vary markedly across sites with gilgais.

1.8.30 Infill slab

Slab cast on the ground between walls.

1.8.31 Landslip

Foundation condition on a sloping site where downhill foundation movement or failure is a design consideration.

1.8.32 Loadbearing wall

Wall imposing a load on the footing greater than 10 kN/m, when factored in accordance with Clause 1.4.2.

1.8.33 Masonry

Stone, brick, terracotta block, concrete block, or other similar building unit, single or in combination, assembled together unit by unit.

1.8.34 Masonry veneer

Construction consisting of a loadbearing frame clad with an outer leaf of masonry.

1.8.35 Maximum differential footing movement

Maximum movement of a footing relative to a straight line joining the ends of the footing system or, in the case of double curvature, joining the points of contraflexure.

1.8.36 Mine subsidence

Settlement, curvature, tilt and lateral strain, either individually or in combination, produced at the surface as a result of underground mining.

1.8.37 Mixed construction

Building consisting of more than one form of construction.

1.8.38 Natural site

Site that has not been subjected to cutting or filling.

1.8.39 Outbuilding

Detached building such as a carport, private garage, shed or similar structure.

1.8.40 Pad footing

Concrete footing used to support a pier or stump.

1.8.41 Pier-and-beam

Footing system incorporating bored piers, bulk piers or piles and reinforced concrete beams supporting a building where the floor is not integral with the beams.

1.8.42 Pier-and-slab

Footing system incorporating bored piers, bulk piers or piles supporting a suspended slab and including a slab partly supported on piers and partly supported on ground.

 © Standards Australia

Licensed to Mrs Cathie Thompson on 17 September 2012. 1 user personal user licence only. Storage, distribution or use on network prohibited (10300097).

1.8.43 Pile

Structural member that is driven, screwed, jacked, vibrated, drilled or otherwise installed in the ground such as to transmit loads to the underlying soil or rock and provide a footing component for a structure.

1.8.44 Reactive site

Site consisting of a clay soil that swells on wetting and shrinks on drying by an amount that can damage buildings on light strip footings or unstiffened slabs. Includes sites classified as Class S, Class M, Class H1, Class H2 or Class E in accordance with Clause 2.1.

1.8.45 Reinforcement

Steel bars, wire or mesh.

1.8.46 Reinforced single-leaf masonry

Outer wall constructed of concrete blocks with some vertically reinforced cores at not greater than 2.0 m centres, such reinforcement being lapped with steel starter bars set in concrete beams or footings and a bond beam.

1.8.47 Rock

1 Strong material, including shaly material and strongly cemented sand or gravel, that does not soften in water or collapse under the combination of loading and wetting.

2 Material that cannot readily be excavated by a backhoe.

1.8.48 Sand

Granular soil that may contain a small proportion of fines including silt or clay. The amount of fines may be assessed as small by a visual inspection or if the amount that passes a 75 μm sieve is 15% or less.

NOTE: Material with a higher proportion of fines should be treated as silt or clay.

1.8.49 Silt

Fine-grained soil that is non-cohesive and non-plastic when wet and may include some sand and clay.

1.8.50 Single-leaf masonry

Outer walls constructed with a single thickness of masonry units.

1.8.51 Single-storey

Construction with wall height, excluding any gable, not exceeding 4.2 m and including only one trafficable floor.

1.8.52 Slab

General term used to refer to slab on ground, stiffened rafts, footing slabs, stiffened footing slabs and waffle rafts.

1.8.53 Slab on ground

Concrete floor supported on the ground and incorporating integral edge beams.

1.8.54 Slab panel

Part of a slab between beams.

1.8.55 Soil suction

Negative pore water pressure in soils, expressed in picofarads (pF).

NOTE: $pF = 1+\log(u)$, where u = total soil suction in kilopascals.

Licensed to Mrs Cathie Thompson on 17 September 2012. 1 user personal user licence only. Storage, distribution or use on network prohibited (10300097).

1.8.56 Stiffened raft

Concrete slab on ground stiffened by integral edge beams and, commonly, a grid of internal beams.

1.8.57 Strip footing

Footing of rectangular section.

1.8.58 Stump

Element supported on a footing used for the support of a frame construction.

1.8.59 Superstructure

Portion of a completed building that is supported by the selected footing system, including slab where applicable.

1.8.60 Two-storey

Construction with wall height, including any gable, not exceeding 8.5 m and including two trafficable floors.

1.8.61 Ultimate bearing pressure

Pressure, under normal moisture conditions, at which a footing sinks without increase of load.

1.8.62 Veneer

Construction of either masonry veneer or articulated masonry veneer.

1.8.63 Waffle raft

A stiffened raft with closely spaced ribs constructed on the ground and with slab panels suspended between ribs.

1.9 NOTATION

The symbols used in this Standard are as follows:

Symbol		Definition
A1, A2, B1, B2	=	exposure classification, reinforced or pre-stressed concrete members (per AS 3600)
B	=	footing diameter or width (Tables E1 to E4, Figure E2, Appendix E)
B_w	=	width of stem of edge, or internal beam (Clauses 4.4, 4.5, and 4.6)
D	=	overall depth of a footing or beam (Figures 3.1, 3.4, and 3.6, Clause 4.5.2, Figures 4.1, 5.4 and 5.6)
D_{cr}	=	critical depth (Paragraph F2, Appendix F)
D_e	=	depth of embedment of edge beam (Paragraph F2, Appendix F)
D_f	=	depth of strip footing from finished ground surface level (Figure 3.6)
D_i	=	ground movement influence distance of a tree or trees (Paragraph H2, Appendix H)
D_s	=	depth of pad footing from finished ground surface level (Figure 3.6 and Figures E1 and E2, Appendix E)
D_t	=	distance of tree to the building (Paragraphs H2, H3 and H4, Appendix H)
d	=	differential movement (Table 2.2)
e	=	edge distance (Paragraphs F1 and F2, Appendix F)

 © Standards Australia

Licensed to Mrs Cathie Thompson on 17 September 2012. 1 user personal user licence only. Storage, distribution or use on network prohibited (10300097).

E = modulus of elasticity (Clause 4.4)

EC_e = saturated extract electrical conductivity, in deciSiemens per metre (Clause 5.5.3 and Table 5.1)

E_d = design action effect on a pile due to all imposed loads (Paragraph G4.3, Appendix G)

f'_c = design characteristic strength of concrete (Table 5.3)

H = geotechnical capacity of stump for horizontal load (Figure 2.1, Paragraph E3, Figure E2, Appendix E)

H^* = design horizontal load on stump (Paragraph E3, Figure E2, Appendix E)

H_s = depth of design soil suction change (Table 2.4, Figure 2.1 and Paragraph F2, Appendix F)

H_t = maximum design drying depth close to a tree or trees (Paragraphs H3, H4 and Figure H1, Appendix H)

HT = design height of single tree (Paragraphs H2.1, H2.6 and H4, Appendix H)

HT_g = design height of a group of trees (Paragraphs H2.2 and H2.6, Appendix H)

H_{ult} = ultimate strength in horizontal loading (Paragraph E3, Appendix E)

h = thickness of layer under consideration (Clause 2.3)

h_h = drop height of the hammer for driven piles (Paragraph G4.3, Appendix G)

h_w = maximum height of masonry wall retaining structure (Figure 6.3)

I = second moment of area (Clause 4.4)

I_{ps} = shrinkage index or instability index without lateral restraint or loading of soil (Clause 2.3.2)

I_{pt} = instability index, including allowance for lateral restraint and vertical load, (Clauses 2.3.1 and 2.3.2 and Table D1, Appendix D)

k = swelling soil stiffness (Paragraph F2, Appendix F, Paragraph G8, Appendix G)

L = footing or slab length in the design direction (Table 4.1, Clause 4.4)

L_s = minimum distance from internal stump or pier to perimeter stump, pier or wall (Figure 3.6)

M_{cr} = cracking moment capacity (Clause 4.4, and Paragraph H4, Appendix H)

M_u = ultimate bending moment strength (Clause 4.4 and Paragraph H4, Appendix H

M^* = design bending moment at a cross-section (Clause 4.4)

N = number of soil layers within the design depth of suction change (Clause 2.3.1)

p_s = swell pressure under footing (Paragraph G8, Appendix G)

R_{ug} = ultimate geotechnical strength of a pile (Paragraph G4.3, Appendix G)

s = centre to centre distance between group of trees (Paragraph H2.4, Appendix H)

S = pile set for driven piles in metres (Paragraph G4.3, Appendix G)

S_n = nominal beam spacing (Figure 5.5)

t = thickness of slab or pad footing (Figure E1, Appendix E)

u = total soil suction (Clauses 1.8.55 and 2.3.1, Table 2.4)

U = geotechnical capacity of stump in uplift (Paragraph E3 and Figure E2, Appendix E)

U^* = design uplift load on stump (Paragraph E3 and Figure E2, Appendix E)

U_{ult} = ultimate strength in uplift (Paragraph E3, Appendix E)

W = overall width of the slab normal to the direction of the beams being considered (Clause 4.5.2 and Figure 4.1)

W_f = shape factor for edge heave (Figures F1 and F2, Appendix F)

W_h = hammer weight for driven piles, in kilonewtons (Paragraph G4.3, Appendix G)

X = offset of re-entrant corner (Figure 5.4)

y_m = differential mound movement (Paragraph F2, Appendix F and Paragraph H4, Appendix H)

y_s = characteristic surface movement (Clauses 1.8.8, 2.2.3, 2.3.1, 4.5.1, 4.5.2, Figure 4.1, Clauses 5.6.4 and 6.6, Table D1, Appendix D, Paragraph G8, Appendix G, Paragraph H4, Appendix H)

y_t = potential surface movement due to the tree-induced suction change in addition to the normal design suction change, (Paragraph H4, Appendix H)

y_{tmax} = maximum potential surface movement due to the tree-induced suction change in addition to the normal design suction change (Paragraph H4, Appendix H)

α = lateral restraint factor (Clauses 2.3.1 and 2.3.2)

Δ = differential footing deflection (Table 4.1, Clauses 4.5.1 and 4.5.2)

φ_g = geotechnical strength reduction factor (Paragraph G4.3, Appendix G)

Δu = soil suction change (Clause 2.3.1)

Δu_{base} = maximum extra soil suction change caused by the vegetation at the maximum design drying depth (Paragraph H4, and Figure H1, Appendix H)

ϕ = strength reduction factor (Clause 4.4 and Paragraph E3, Appendix E)

1.10 REINFORCEMENT DESIGNATION

1.10.1 Trench mesh

For the purposes of this Standard, trench mesh is designated as x–L8TM, x–L11TM or x–L12TM, where x is the number of main longitudinal bars required of the appropriate trench mesh L8TM, L11TM or L12TM. Trench mesh shall comply with AS/NZS 4671.

1.10.2 Square and rectangular mesh

Square and rectangular meshes referred to in this Standard shall comply with AS/NZS 4671.

Wires designed in accordance with Australian and New Zealand Standards shall comply with the requirements for Grade 500L in accordance with AS/NZS 4671.

NOTE: For square and rectangular meshes referred to in this Standard, the mesh sizes are prefixed with SL and RL respectively.

1.10.3 Reinforcing bars

Reinforcing bars shall comply with AS/NZS 4671 Grade 500N.

NOTE: Reinforcing bars are specified as x–N12, x–N16, or x–N20, where x is the number of bars.

Licensed to Mrs Cathie Thompson on 17 September 2012. 1 user personal user licence only. Storage, distribution or use on network prohibited (10300097).

1.10.4 Substitution of reinforcement

The ductility and strength requirements of reinforcement specified in the standard designs of Section 3 shall not be reduced except as provided in Clause 3.7.

1.11 INFORMATION IN DOCUMENTS

1.11.1 Classification report

For class P sites, the classification report shall include the reason for the P classification and recommendations for further investigation, as required, to provide adequate data for footing system design.

1.11.2 Design documents

The site classification shall be stated on the drawings. The selected footing systems and any required site work and required site drainage shall be documented.

Licensed to Mrs Cathie Thompson on 17 September 2012. 1 user personal user licence only. Storage, distribution or use on network prohibited (10300097).

Licensed to Mrs Cathie Thompson on 17 September 2012. 1 user personal user licence only. Storage, distribution or use on network prohibited (10300097).

SECTION 2 SITE CLASSIFICATION

2.1 GENERAL

2.1.1 Classification

Site classification is based on the expected ground surface movement and the depth to which this movement extends. Sites shall be classified in accordance with Clauses 2.1.2 and 2.1.3 using the techniques and principles specified in Clauses 2.2, 2.3, 2.4 and 2.5.

NOTE: Site classification may require consideration of factors beyond the boundaries of the subject site.

2.1.2 Site classification based on soil reactivity

Classification of sites where ground movement is predominantly due to soil reactivity under normal moisture conditions shall be classified based on the expected level of ground movement as nominated in Table 2.1.

For Classes M, H1, H2 and E, further classification may be required, based on the depth of the expected moisture change. For sites with deep-seated moisture changes characteristic of dry climates and corresponding to a design depth of suction change (H_s) equal to or greater than 3 m, the classification shall be M-D, H1-D, H2-D or E-D as appropriate.

NOTE: For example, M represents a moderately reactive site with shallow moisture changes and M-D represents a moderately reactive site with deep moisture changes.

TABLE 2.1

CLASSIFICATION BASED ON SITE REACTIVITY

Class	Foundation
A	Most sand and rock sites with little or no ground movement from moisture changes
S	Slightly reactive clay sites, which may experience only slight ground movement from moisture changes
M	Moderately reactive clay or silt sites, which may experience moderate ground movement from moisture changes
H1	Highly reactive clay sites, which may experience high ground movement from moisture changes
H2	Highly reactive clay sites, which may experience very high ground movement from moisture changes
E	Extremely reactive sites, which may experience extreme ground movement from moisture changes

2.1.3 Classification of other sites

Sites with inadequate bearing strength or where ground movement may be significantly affected by factors other than reactive soil movements due to normal moisture conditions shall be classified as Class P. Class P sites include soft or unstable foundations such as soft clay or silt or loose sands, landslip, mine subsidence, collapsing soils and soils subject to erosion, reactive sites subject to abnormal moisture conditions and sites that cannot be classified in accordance with Clause 2.1.2.

A site shall be classified as Class P if—

(a) the bearing strength is less than that specified in Clause 2.4.5;

(b) excessive foundation settlement may occur due to loading on the foundation;

 © Standards Australia

(c) the site contains uncontrolled or controlled fill as identified in Clause 2.5.3;

(d) the sites may be subject to mine subsidence, landslip, collapse activity or coastal erosion;

(e) the site may be subject to moisture changes due to site conditions more severe than the normal site conditions described in Clause 1.3.2; or

(f) the site may be subject to other factors resulting in foundation movement beyond the reactive soil movements resulting from moisture changes due to the normal site conditions described in Clause 1.3.2.

The basis for classification shall be recorded on the site classification report together with recommendations for further geotechnical investigation.

2.2 METHODS FOR SITE CLASSIFICATION

2.2.1 General

Classification of sites other than Class P sites shall adopt one or both of the following methods:

(a) Identification of the soil profile in accordance with Clause 2.2.2.

(b) Site classification based on characteristic surface movement in accordance with Clause 2.2.3.

2.2.2 Identification of the soil profile

Site classification based on identification of the soil profile shall include one or more of the following methods:

(a) Site classification based on typical soil profile data given in Appendix D. The soil profile shall be confirmed by investigation using a borehole(s) or other excavation or sampling method in accordance with Clauses 2.4.3 and 2.4.4. The classification report shall include details of the investigation method used and significant soil profile(s).

(b) Identification of the soil profile and interpretation of the current performance of existing buildings. The soil profile shall be confirmed by inspection of soil from a borehole(s) or other excavation or sampling method in accordance with Clauses 2.4.3 and 2.4.4. Interpretation of the performance of existing residential footing systems within the region that are not less than 10 years old and are founded on a similar soil profile shall be in accordance with Table 2.2. In areas of deep-seated moisture change the site classification shall be modified by the addition of '-D' as described in Clause 2.1.2.

Licensed to Mrs Cathie Thompson on 17 September 2012. 1 user personal user licence only. Storage, distribution or use on network prohibited (10300097).

Licensed to Mrs Cathie Thompson on 17 September 2012. 1 user personal user licence only. Storage, distribution or use on network prohibited (10300097).

TABLE 2.2

CLASSIFICATION OF NORMAL SITES BY INTERPRETATION OF FOOTING PERFORMANCE OF EXISTING BUILDINGS (see Note 1)

Wall construction	Performance of walls of existing buildings on lightly stiffened strip footing or slab on ground	Site classification in accordance with Table 2.1
Clad frame	Buildings with differential movements (d), in mm (lowest to highest points on perimeter of building)	
	$d \leq 15$	S
	$15 < d \leq 30$	M
	$30 < d \leq 45$	H1
	$45 < d \leq 55$	H2
	$d > 55$	E
Masonry (veneer or full)	Damage Category 0 to Category 1	S or M
	Damage often Category 1, but rarely Category 2	M or H1
	Damage often Category 1 and 2, but rarely Category 3	H1 or H2
	Damage often Category 3 or more severe and area usually well known for damage to buildings and structures	E

NOTES:

1 Damage categories shall be as given in Appendix C.

2 Where performance of existing buildings indicates highly or extremely reactive sites, a further investigation should be carried out for buildings other than small extensions, garages or outbuildings.

3 Timber subfloor structures in clad-frame buildings may have settled due to shrinkage or biodegradation of the timber structure and not only ground movement.

4 Lightly stiffened footings may be taken to be footings as detailed in this Standard for Class A and S sites.

2.2.3 Site classification based on characteristic surface movement

The characteristic surface movements (y_s) estimated in accordance with Clause 2.3 shall be used to determine the site class by applying the limits in Table 2.3. In areas of deep-seated moisture change, the site classification shall be modified by the addition of '-D' as specified in Clause 2.1.2.

TABLE 2.3

CLASSIFICATION BY CHARACTERISTIC SURFACE MOVEMENT (y_s)

Characteristic surface movement (y_s) mm	Site classification in accordance with Table 2.1
$0 < y_s \leq 20$	S
$20 < y_s \leq 40$	M
$40 < y_s \leq 60$	H1
$60 < y_s \leq 75$	H2
$y_s > 75$	E

 © Standards Australia

Licensed to Mrs Cathie Thompson on 17 September 2012. 1 user personal user licence only. Storage, distribution or use on network prohibited (10300097).

2.3 ESTIMATION OF THE CHARACTERISTIC SURFACE MOVEMENT

2.3.1 Characteristic surface movement

For site classification purposes, the characteristic surface movement (y_s) shall be determined by estimating the movement of each soil layer 1 to N within the depth of design suction change and summing the movement for all layers, as follows:

$$y_s = \frac{1}{100}\sum_{n=1}^{N}\left(I_{pt}\,\overline{\Delta u}h\right)_n \qquad \ldots 2.3.1$$

where

y_s = characteristic surface movement, in millimetres

α = lateral restraint factor (see Clause 2.3.2)

I_{pt} = instability index, in %/picofarads (pF) (see Clause 2.3.2)

$\overline{\Delta u}$ = soil suction change averaged over the thickness of the layer under consideration, in picofarads (pF)

h = thickness of layer under consideration, in millimetres

N = number of soil layers within the design depth of suction change

The estimation of surface movement shall be based on sufficient soil data to adequately describe the soil profile.

2.3.2 Instability index

The instability index (I_{pt}) is defined as the percent vertical strain per unit change in suction, taking into account the expected values of—

(a) applied stress;

(b) degree of lateral restraint; and

(c) soil suction range.

The instability index is not a constant for a particular clay, but it may be estimated from the soil shrinkage index (I_{ps}). The soil shrinkage index shall be derived using one or more of the following methods:

(i) Laboratory tests for soil reactivity, as set out in AS 1289.7.1.1, AS 1289.7.1.2 and AS 1289.7.1.3.

(ii) Correlations between shrinkage index (I_{ps}) and other clay index tests for the soil type.

(iii) Visual-tactile identification of the soil by a suitably qualified and experienced person.

NOTE: A suitably qualified and experienced person is an engineer or engineering geologist having appropriate expertise and local experience.

For method (iii) above, the suitably qualified and experienced person shall check the soil property identification against laboratory testing on reactive soils at a period not longer than six months and at least once in every 50 sites personally classified.

In the absence of more exact information, the instability index (I_{pt}) shall be estimated from the shrinkage index (I_{ps}) using the following correction:

$$I_{pt} = \alpha \times I_{ps} \qquad \ldots 2.3.2(1)$$

α shall be taken as follows:

(A) In the cracked zone (unrestrained)

$\alpha = 1.0$

(B) In the uncracked zone (restrained laterally by soil and vertically by soil weight)

$$\alpha = 2.0 - z/5 \qquad \ldots 2.3.3(2)$$

where z = the depth from the finished ground level, in metres, to the centroid of the area defined by the suction change profile and the thickness of the soil layer under consideration in the uncracked zone.

In the absence of more exact information, the depth of the cracked zone shall be taken as—

(1) $0.5H_s$ to H_s where H_s is as given in Table 2.4.

(2) $0.75H_s$ in Adelaide and Melbourne; and

(3) $0.5H_s$ in other areas.

For reactive clay in controlled fill placed less than 5 years prior to building construction, the depth of the cracked zone shall be taken as zero. Where a site has been cut less than two years prior to building construction, the depth of the cracked zone shall be reduced by the depth of the cut.

NOTE: The cracked zone relates to the zone in which predominantly vertical shrinkage cracks exist seasonally

2.3.3 Soil suction profile

Values of depth of design soil suction change (H_s) are given in Table 2.4 for various locations. Where a range is given, lower values correspond to wetter climate areas, typically near the coast or in the hills. The classifier may extrapolate to other areas based on climate. Alternatively, the value of H_s may be estimated from the Thornthwaite Moisture Index (TMI) for the region, based on at least 25 continuous years of climate data, using the relationship given in Table 2.5.

Where a permanent water table is encountered within the depth H_s from the surface, the suction change shall be modified in accordance with Figure 2.1. Shallow bedrock shall be treated as a non-reactive soil layer, having no effect on the design suction change as shown in Figure 2.1.

Where the soil profile indicates deep and open shrinkage cracking, the depth (H_s) given in Table 2.4 shall be increased to not less than the depth of cracking.

Licensed to Mrs Cathie Thompson on 17 September 2012. 1 user personal user licence only. Storage, distribution or use on network prohibited (10300097).

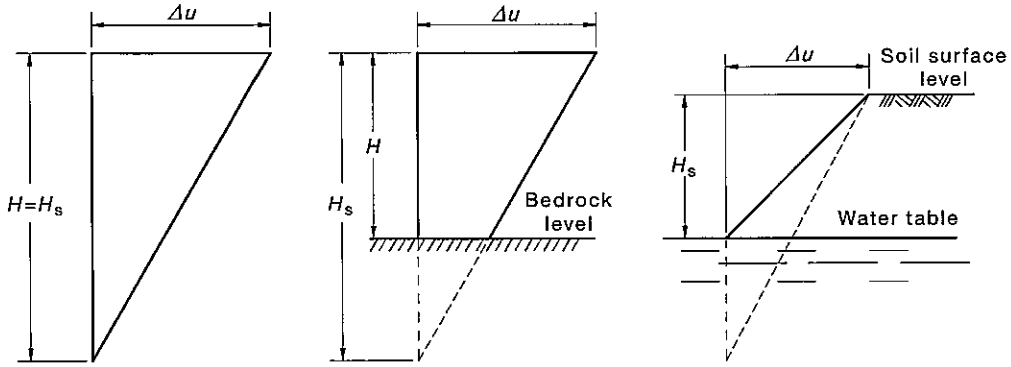

(a) Soil to depth ≥H_s (b) Effect of bedrock (c) Effect of groundwater

Δu and H_s are to be taken from Table 2.4 (except that H_s is taken as the depth to water table if it is less than the value in Table 2.4)

FIGURE 2.1 EFFECT OF BEDROCK OR WATER TABLE ON DESIGN SUCTION CHANGE PROFILES

TABLE 2.4

SOIL SUCTION CHANGE PROFILES FOR CERTAIN LOCATIONS

Location	Change in suction at the soil surface (Δu) pF	Depth of design soil suction change (H_s) m
Adelaide	1.2	4.0
Albury/Wodonga	1.2	3.0
Brisbane/Ipswich	1.2	1.5–2.3 (see Note)
Gosford	1.2	1.5–1.8 (see Note)
Hobart	1.2	2.3–3.0 (see Note)
Hunter Valley	1.2	1.8–3.0 (see Note)
Launceston	1.2	2.3–3.0 (see Note)
Melbourne	1.2	1.8–2.3 (see Note)
Newcastle	1.2	1.5–1.8 (see Note)
Perth	1.2	1.8
Sydney	1.2	1.5–1.8 (see Note)
Toowoomba	1.2	1.8–2.3 (see Note)

NOTE: The variation in H_s depends largely on climatic variation.

Licensed to Mrs Cathie Thompson on 17 September 2012. 1 user personal user licence only. Storage, distribution or use on network prohibited (10300097).

Licensed to Mrs Cathie Thompson on 17 September 2012. 1 user personal user licence only. Storage, distribution or use on network prohibited (10300097).

TABLE 2.5

RELATIONSHIP BETWEEN TMI, DEPTH OF DESIGN SOIL SUCTION CHANGE (H_s) AND CLIMATIC ZONE

TMI	Depth of design suction change (H_s), m	Climatic zone
>10	1.5 m	1
≥–5 to 10	1.8 m	2
≥–15 to ≤–5	2.3 m	3
≥–25 to ≤–15	3.0 m	4
≥–40 to ≤–25	4.0 m	5
≤40	>4.0 m	6

NOTE: Maps of regional climatic zones in Victoria are presented in Figures D1 and D2, Appendix D.

2.4 SITE INVESTIGATION REQUIREMENTS

2.4.1 General

Where a site investigation is required for the purpose stated in Clause 2.4.2, the requirements in Clauses 2.4.3 to 2.4.5 shall be met. An investigation in accordance with this Clause (2.4) may not provide sufficient information to allow design of footings on Class P sites. If, in the opinion of the classifier, the investigation does not include sufficient information for the design of a footing system, a recommendation shall be made regarding further investigation.

2.4.2 Purpose

The purpose of site investigation is to provide sufficient information to enable a site classification to be made, and to collect information on the presence and depth of fill material, natural soil profile, bearing strength and soil reactivity where required.

2.4.3 Depth of investigation

The soil profile shall be examined to a minimum depth below the surface or below the depth of cutting where known at the time of site classification equal to 0.75 times the depth of design suction change (H_s), for the locality, but not less than 1.5 m unless rock is encountered.

2.4.4 Minimum number of exploration positions

The following shall apply to building sites:

(a) A minimum of one borehole or pit per building site.

(b) A minimum of three boreholes per site in localities where $H_s \geq 3.0$ m, and areas where the soil profile is known to be highly variable.

The total number of boreholes across a housing subdivision may be reduced if soil profiling indicates uniform soil conditions.

The presence of gilgais in an area is evidence of highly variable soil profiles within a site.

For sites for extensions or outbuildings, essentially rectangular in plan, with walls articulated at the junction with any other building and not longer than 9 m in either direction, only one borehole is required if the original site classification for the building has proved satisfactory.

 © Standards Australia

Licensed to Mrs Cathie Thompson on 17 September 2012. 1 user personal user licence only. Storage, distribution or use on network prohibited (10300097).

2.4.5 Bearing capacity

Determination of adequate bearing strength shall be considered as follows:

(a) The design bearing capacity at foundation level shall be not less than 100 kPa for strip and pad footings and under the edge footing of footing slabs used without tie bars between the edge footing and slab.

(b) The design bearing capacity at foundation level shall be not less than 50 kPa under all beams and slab panels and support thickenings for slab construction.

Determination of bearing capacity shall consider the weakest state of the foundation under normal site conditions. Local knowledge shall be used where available.

NOTE: Inadequate bearing capacity is not common, except for some sites with loose sand, collapsing soils or swampy deep silt deposits.

2.5 ADDITIONAL CONSIDERATIONS FOR SITE CLASSIFICATION

2.5.1 Sites consisting predominantly of sand or rock

Sites consisting predominantly of sand of adequate bearing capacity or rock, as defined in Clause 1.8, shall be classified as Class A.

NOTE: Loose sands may not have adequate bearing capacity for strip or pad footings.

2.5.2 Effect of site works on classification

The classification of a site shall take into account the effect of site works when these are known at the time of classification. Where the effect of site works has not been taken into account, the classification shall be reconsidered if—

(a) the depth of cut on an S, M, H1, H2 or E site exceeds the lesser of $0.25H_s$ or 0.5 m; or

(b) the depth of fill would result in a P classification in accordance with Clause 2.5.3.

2.5.3 Effect of fill on classification

For the purposes of this Standard, fill that is in accordance with the technical and control requirements specified in AS 3798 for structural fill for residential applications is controlled fill. Other fill is uncontrolled fill for the purposes of this Standard.

The classification of sites containing fill shall be in accordance with the following:

(a) *Controlled fill:*

(i) *Shallow fill* The classification of a site with controlled fill not more than 0.8 m deep for sand and not more than 0.4 m deep for material other than sand shall be the same as the natural site, prior to filling.

(ii) *Deep fill* The classification of a site with controlled sand fill deeper than 0.8 m shall be the same as the natural site prior to filling. However, the presence of the sand may be used to justify by engineering principles a less severe reactive site classification. The effect of the fill on the settlement of the underlying soil shall be taken into account. The classification of a site with controlled fill of material other than sand and deeper than 0.4 m shall be Class P.

(b) *Uncontrolled fill:*

(i) *Shallow fill* The classification of a site with uncontrolled fill not more than 0.8 m deep for sand and not more than 0.4 m deep for material other than sand shall be Class P, unless all footings (edge beams, internal beams and load support thickenings) are founded on natural soil through the filling.

(ii) *Deep fill* The classification of a site with uncontrolled fill deeper than 0.8 m for sand and 0.4 m for material other than sand shall be Class P.

(c) *Reclassification of filled sites* A site with controlled fill and classified P may be given an alternative site classification in accordance with Table 2.1 if assessed in accordance with engineering principles. The assessment shall consider the movement of the fill and the underlying soil from the condition at construction to the long-term equilibrium moisture conditions.

Licensed to Mrs Cathie Thompson on 17 September 2012. 1 user personal user licence only. Storage, distribution or use on network prohibited (10300097).

SECTION 3 STANDARD DESIGNS

3.1 SELECTION OF FOOTING SYSTEMS

3.1.1 Selection procedure

Standard deemed-to-comply designs shall be in accordance with Clauses 3.2 to 3.6. These designs shall not apply to—

(a) Class E or Class P sites;

(b) buildings longer than 30 m;

(c) slabs containing permanent joints (e.g. contraction or control joints);

(d) two-storey construction with a suspended concrete floor at the first floor level except in accordance with Clause 3.9;

(e) two-storey construction in excess of the height limitations (see Clause 1.8.60);

(f) support of columns or fireplaces not complying with Clause 3.10;

(g) buildings incorporating wing walls or masonry arches unless they are detailed for movement in accordance with TN 61;

(h) construction of three or more storeys; or

(i) single-leaf earth or stone masonry walls greater than 3 m in height.

On moderately and highly reactive sites, the entire footing system for a single building shall comprise only one standard design.

These designs shall not apply to construction using concrete strengths of 32 MPa and greater.

3.1.2 Design for single-leaf masonry, mixed construction and earth wall construction

The proportions for the selected footing system for single-leaf masonry, mixed construction and earth wall construction shall comply with Clause 3.1.1 using the equivalent construction set out in Table 3.1.

Licensed to Mrs Cathie Thompson on 17 September 2012. 1 user personal user licence only. Storage, distribution or use on network prohibited (10300097).

Licensed to Mrs Cathie Thompson on 17 September 2012. 1 user personal user licence only. Storage, distribution or use on network prohibited (10300097).

TABLE 3.1

EQUIVALENT TYPES OF CONSTRUCTIONS

Actual construction		Equivalent construction
External walls	Internal walls	
Single–leaf masonry		
Reinforced single-leaf masonry	Articulated masonry on Class A and Class S sites, or framed	Articulated masonry veneer
Reinforced single-leaf masonry	Articulated masonry or reinforced single–leaf masonry	Masonry veneer
Reinforced single-leaf masonry	Masonry	Articulated full masonry
Articulated single-leaf masonry	Articulated masonry	Articulated full masonry
Articulated single-leaf masonry	Masonry	Articulated full masonry
Other single-leaf masonry	Framed	Articulated full masonry
Other single-leaf masonry	Masonry	Full masonry
Mixed construction		
Full masonry	Framed	Articulated full masonry
Articulated full masonry	Framed	Masonry veneer
Articulated rendered or sheet clad frame	Framed	Articulated masonry veneer
Precast concrete panels		
Reinforced concrete panel	Framed	Articulated masonry veneer
Earth wall construction		
Infill panels of earth wall construction	Framed earth wall construction	Articulated masonry veneer
Loadbearing earth wall construction	Load bearing earth wall construction	Articulated full masonry

3.1.3 Construction with framed party walls

For the purpose of this Section, where construction involves framed party walls, the building shall be taken as equivalent to masonry veneer construction or design shall be based on engineering principles.

3.1.4 Design for masonry feature walls

Masonry feature walls may be used in basic masonry veneer construction on footings appropriate for masonry veneer, provided the wall is straight, one-storey, less than 4 m in length between joints and is supported by either—

(a) an internal beam in a stiffened raft; or

(b) an internal strip footing continuous from external strip footing to external strip footing.

3.1.5 Design for outbuildings and extensions to dwellings

The footing system design given in this Section shall be used for outbuildings and extensions.

Outbuildings of clad framed construction may use footing systems appropriate for one class of reactivity less severe than for a main building.

Walls of masonry extensions, or masonry veneer extensions, shall be articulated at the junction with the existing building.

 © Standards Australia

Footings of similar proportions and details to those used in an existing building on the same allotment may be used, provided the performance of the existing building has been satisfactory over at least 10 years after construction and there are no unusual moisture conditions.

3.1.6 Design for rock outcrops

Where a footing or edge beam encounters a single local rock outcrop over a length less than 1 m, the depth of the footing or edge beam may be reduced by up to one-third, provided the amount of top and bottom reinforcement is doubled and extended 500 mm past the section with reduced depth.

Alternatively, the footing may be stepped or raised, provided the structural stiffness is preserved.

3.1.7 Design for partial rock foundation

Where part of the footing is on rock and part is on soil, provision for movement at the change between the two types of foundation shall be made by articulation of the superstructure or strengthening of the footing system.

On M, H1 and H2 sites where part of the footing is on rock and part is on soil, the design shall be in accordance with engineering principles.

3.1.8 Design for complete rock foundation

Where the edge beam or footing is to be founded entirely on rock, the footing or beam may be replaced by a levelling pad of concrete or mortar.

3.2 STIFFENED RAFT

3.2.1 General

The concrete section sizes, beam spacing and reinforcement requirements for stiffened rafts shall be as given in Figure 3.1. Stiffened rafts shall be detailed in accordance with Clauses 3.2.2 to 3.2.4 and 5.3.

3.2.2 Beam layout

Internal and external edge beams shall form an integral structural grid in accordance with Clauses 5.3.8 and 5.3.9.

Where the number of beams in a particular direction satisfies the requirements of the maximum spacing given in Figure 3.1, the spacing between individual beams may be varied, provided the spacing between any two beams does not exceed the spacing given in Figure 3.1 by 25%. These allowances for increased beam spacings shall not override the maximum spacings between edge beams and first internal beams, as required by Clause 5.3.9.

3.2.3 Reinforcement

Where external beams wider than 300 mm are specified, an extra bottom bar or equivalent of the same bar size shall be used for each 100 mm additional width.

If a beam depth greater than that required in Figure 3.1 for the particular class of site and type of construction is to be used, the bottom reinforcement for the deeper beam given in Figure 3.1 shall be used.

The slab mesh specified in Figure 3.1 may be replaced with alternative reinforcement as given in Table 3.2.

Licensed to Mrs Cathie Thompson on 17 September 2012. 1 user personal user licence only. Storage, distribution or use on network prohibited (10300097).

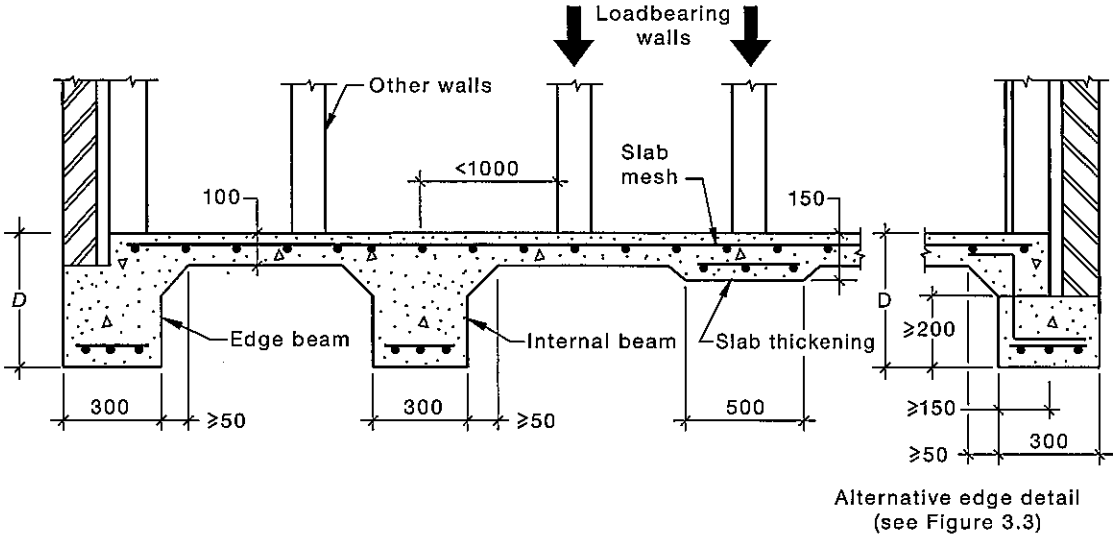

DIMENSIONS IN MILLIMETRES

FIGURE 3.1 (in part) STIFFENED RAFT DESIGNS SITE CLASSES A, S, M, M-D, H1, H2, H1-D,H2-D

Licensed to Mrs Cathie Thompson on 17 September 2012. 1 user personal user licence only. Storage, distribution or use on network prohibited (10300097).

Licensed to Mrs Cathie Thompson on 17 September 2012. 1 user personal user licence only. Storage, distribution or use on network prohibited (10300097).

Site class	Type of construction	Edge and internal beams				
		Depth (*D*) mm	Bottom reinforcement		Top bar reinforce-ment	Max beam spacing cc m
			Mesh	Bar alternative		
Class A	Clad frame	300	3-L8TM	2N12	—	—
	Articulated masonry veneer	300	3-L8TM	2N12	—	—
	Masonry veneer	300	3-L8TM	2N12	—	—
	Articulated full masonry	400	3-L8TM	2N12	—	—
	Full masonry	500	3-L8TM	2N12	—	—
Class S	Clad frame	300	3-L8TM	2N12	—	—
	Articulated masonry veneer	300	3-L8TM	2N12	—	—
	Masonry veneer	300	3-L11TM	3N12	—	—
	Articulated full masonry	500	3-L11TM	3N12	2N12	—
	Full masonry	700	2x3-L11TM	3N16	2N16	5
Class M	Clad frame	300	3-L11TM	3N12	—	6
	Articulated masonry veneer	400	3-L11TM	3N12	—	6
	Masonry veneer	400	3-L11TM	3N12	—	5
	Articulated full masonry	625	3-L11TM	3N12	2N12	4
	Full masonry	950	2x3-L11TM	3N16	2N16	4
Class M-D	Clad frame	400	3-L11TM	3N12	—	5
	Articulated masonry veneer	400	3-L11TM	3N12	1N12	4
	Masonry veneer	500	3-L12TM	3N12	2N12	4
	Articulated full masonry	650	3-L12TM	2N16	2N16	4
	Full masonry	1050	2x3-L11TM	3N16	3N16	4
Class H1	Clad frame	400	3-L11TM	3N12	—	5
	Articulated masonry veneer	400	3-L11TM	3N12	1N12	4
	Masonry veneer	500	3-L11TM	3N12	3N12	4
	Articulated full masonry	750	2x3-L11TM	3N16	2N16	4
	Full masonry	1050	2x3-L12TM	3N16	3N16	4
Class H1-D	Clad frame	400	3-L11TM	3N12	1N12	4
	Articulated masonry veneer	500	3-L11TM	3N12	2N12	4
	Masonry veneer	650	2x3-L11TM	3N16	1N16	4
	Articulated full masonry	800	2x3-L11TM	3N16	2N16	4
	Full masonry	1100	2x3-L12TM	3N16	3N16	4
Class H2	Clad frame	550	3-L11TM	3N12	2N12	4
	Articulated masonry veneer	600	3-L12TM	3N12	2N12	4
	Masonry veneer	750	2x3-L11TM	3N16	2N16	4
	Articulated full masonry	1000	2x3-L11TM	3N16	2N16	4
	Full masonry	—	—	—	—	—
Class H2-D	Clad frame	550	2x3-L11TM	3N16	2N16	4
	Articulated masonry veneer	700	2x3-L11TM	3N16	2N16	4
	Masonry veneer	750	2x3-L11TM	3N16	2N16	4
	Articulated full masonry	1000	2x3-L11TM	3N16	2N16	4
	Full masonry	—	—	—	—	—

NOTE: Slab reinforcement for all site classes shall be as follows:

(a) SL72, where slab length <18 m

(b) SL82, where slab length 18 to 25 m

(c) SL92, where slab length >25 and <30 m

FIGURE 3.1 (in part) STIFFENED RAFT DESIGNS FOR SITE CLASSES A, S, M, M-D, H1, H2, H1-D, H2-D

TABLE 3.2

ALTERNATIVE SLAB REINFORCEMENT

Alternative slab mesh	Specified slab mesh		
	SL102	SL92	SL82
	Additional reinforcement at top of beams		
SL92	3-L11TM	—	—
SL82	3-N16	3-L11TM	—
SL72	4-N16	4-L12TM	2-L12TM

3.2.4 Construction

Except on site Classes M-D, H1-D and H2-D, a horizontal construction joint is permitted in the edge and internal beams, provided the concrete-to-concrete joint is at least 150 mm wide and traversed by R10 or N10 fitments at 600 mm centres or equivalent.

NOTE: See alternative edge beam detail in Figure 3.1.

Construction details shall be as given in Clauses 6.4 and 6.6.

Requirements for shrinkage crack control shall be as given in Clause 5.3.7.

3.2.5 Reinforced masonry

Where a reinforced single-leaf masonry wall with a continuous reinforced bond beam is constructed directly above and structurally connected to a concrete edge beam, and complies with the minimum requirements for reinforced masonry walls in AS 4773.1, the beam may be 300 mm wide by 300 mm deep with 3-L11TM reinforcement.

3.3 FOOTING SLAB

Footing slabs shall be selected in accordance with Figure 3.2 (Class A) or Figure 3.3 (Class A or Class S).

(a) *Unreinforced footing* Figure 3.2 sets out requirements for unreinforced footings.

(b) *Reinforced footing* The proportions for the tied edge beam apply only where there is a structural connection by concrete-to-concrete contact tied with fitments.

Where the edge beam supports but is not tied to the slab such as is shown for the alternative edge beam treatment in Figure 3.3, the footing proportions and footing reinforcement shall comply with Figure 3.6.

Construction shall be in accordance with Section 6. In particular, for the alternative edge treatment, the retaining wall details shall be in accordance with Clause 6.4.5.

Fitments shall be structurally anchored above and below the joint.

Licensed to Mrs Cathie Thompson on 17 September 2012. 1 user personal user licence only. Storage, distribution or use on network prohibited (10300097).

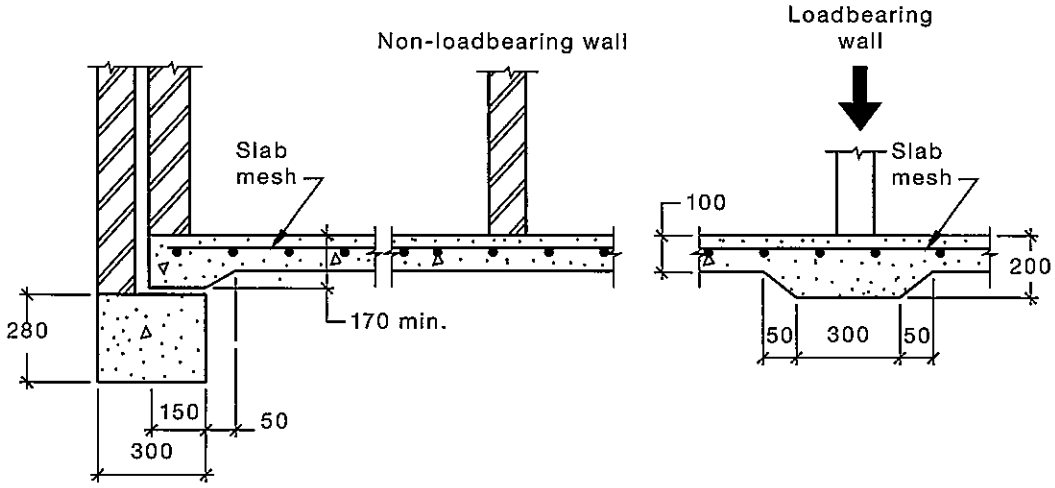

NOTES:

1 Slab reinforcement shall be as follows:

(a) SL63 when maximum slab length ≤12 m.

(b) SL62 when maximum slab length >12 m and <18 m.

(c) SL72 when maximum slab length ≥18 m and <25 m.

(d) SL82 when maximum slab length ≥25 m and <30 m.

2 In Western Australia, for slabs under 25 m in length, where specified by an appropriately qualified engineer, the slab thickness may be reduced to 85 mm with reinforcement as specified below. All other details remain the same as follows.

(a) SL53 when maximum slab length ≤12 m.

(b) SL63 when maximum slab length >12 m and <18 m.

(c) SL62 when maximum slab length ≥18 m and <25 m.

3 Dune sands may require compaction.

DIMENSIONS IN MILLIMETRES

FIGURE 3.2 FOOTING SLAB FOR CLASS A SITES FOR CLAD FRAME, ARTICULATED MASONRY VENEER, MASONRY VENEER, ARTICULATED FULL MASONRY OR FULL MASONRY

Licensed to Mrs Cathie Thompson on 17 September 2012. 1 user personal user licence only. Storage, distribution or use on network prohibited (10300097).

Licensed to Mrs Cathie Thompson on 17 September 2012. 1 user personal user licence only. Storage, distribution or use on network prohibited (10300097).

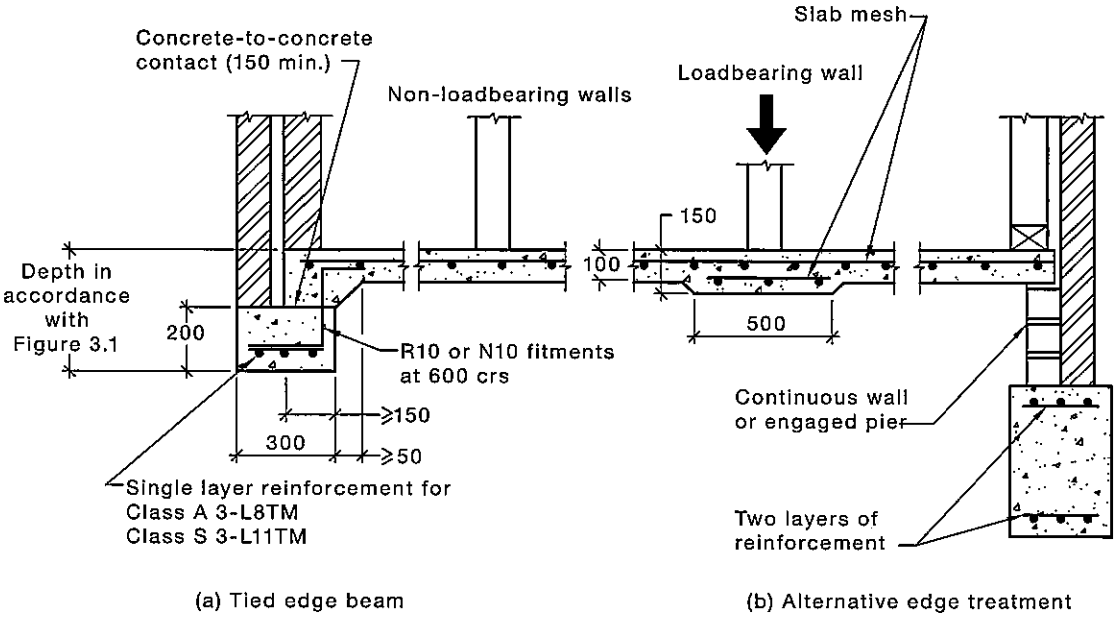

DIMENSIONS IN MILLIMETRES

FIGURE 3.3 FOOTING SLAB FOR CLASS A AND FOR CLASS S SITES FOR CLAD FRAME, ARTICULATED MASONRY VENEER, MASONRY VENEER, ARTICULATED FULL MASONRY OR FULL MASONRY

3.4 WAFFLE RAFTS

3.4.1 General

Waffle rafts shall be specified in accordance with Figure 3.4. Modifications to the details given in Figure 3.4 shall not be undertaken without engineering design in accordance with Section 4.

A slab thickness of 85 mm may be used in garage areas.

Internal and edge beams shall be arranged such as to maintain continuity at re-entrant corners, in accordance with Clause 5.3.8.

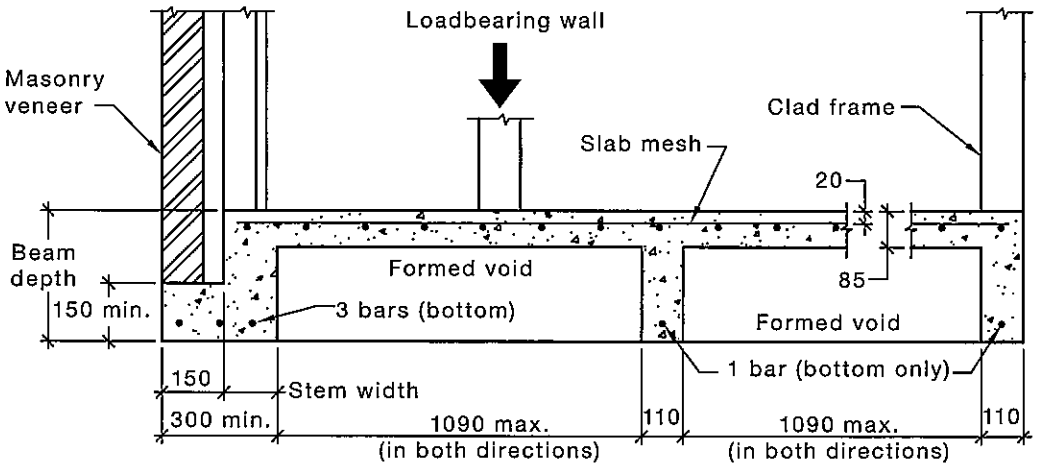

DIMENSIONS IN MILLILMETRES

FIGURE 3.4 (in part) WAFFLE RAFT

Licensed to Mrs Cathie Thompson on 17 September 2012. 1 user personal user licence only. Storage, distribution or use on network prohibited (10300097).

Site class	Type of construction	Beam reinforcement				Slab mesh	
		Depth (D) mm	Edge beam		Internal beam	Slab length, m	
			Mesh alternative	Bar alternative		<20	≥20 and <30
A	Clad frame	260	3-L8TM	3N12	1N12	SL72	SL82
	Articulated masonry veneer	310	3-L8TM	3N12	1N12	SL72	SL82
	Masonry veneer	310	3-L8TM	3N12	1N12	SL72	SL82
	Articulated full masonry (S/S)	310	3-L8TM	3N12	1N12	SL72	SL82
	Full masonry	—	—	—	—	—	—
S	Clad frame	260	3-L8TM	3N12	1N12	SL72	SL82
	Articulated masonry veneer	310	3-L8TM	3N12	1N12	SL72	SL82
	Masonry veneer	310	3-L8TM	3N12	1N12	SL72	SL82
	Articulated full masonry (S/S)	385	3-L8TM	3N12	1N16	SL72	SL82
	Full masonry	—	—	—	—	—	—
M	Clad frame	310	3-L11TM	3N12	1N12	SL72	SL82
	Articulated masonry veneer	310	3-L11TM	3N12	1N12	SL72	SL82
	Masonry veneer	310	3-L11TM	3N12	1N12	SL72	SL82
	Articulated full masonry (S/S)	610	2x3-L11TM	3N16	1N16	SL72	SL82
	Full masonry	—	—	—	—	—	—
M-D	Clad frame	310	3-L11TM	3N12	1N12	SL72	SL92
	Articulated masonry veneer	310	3-L11TM	3N12	1N12	SL72	SL92
	Masonry veneer	385	2x3-L11TM	3N16	1N16	SL72	SL92
	Articulated full masonry (S/S)	610	2x3-L11TM	3N16	1N16	SL72	SL92
	Full masonry	—	—	—	—	—	—
H1	Clad frame	310	3-L11TM	3N12	1N12	SL82	SL92
	Articulated masonry veneer	385	3-L11TM	3N12	1N12	SL82	SL92
	Masonry veneer	460	2x3-L11TM	3N16	1N16	SL82	SL92
	Articulated full masonry (S/S)	610	2x3-L11TM	3N16	1N16	SL82	SL92
	Full masonry	—	—	—	—	—	—
H1-D	Clad frame	310	3-L11TM	3N12	1N12	SL82	SL92
	Articulated masonry veneer	385	3-L11TM	3N12	1N12	SL82	SL92
	Masonry veneer (S/S)	460	2x3-L11TM	3N16	1N16	SL82	SL92
	Articulated full masonry	—	—	—	—	—	—
	Full masonry	—	—	—	—	—	—
H2	Clad frame	310	3-L11TM	3N12	1N12	SL82	SL92
	Articulated masonry veneer	385	2x3-L11TM	3N16	1N16	SL82	SL92
	Masonry veneer	—	—	—	—	—	—
	Articulated full masonry	—	—	—	—	—	—
	Full masonry	—	—	—	—	—	—
H2-D	Clad frame	385	2x3-L11TM	3N16	1N16	SL82	SL92
	Articulated masonry veneer (S/S)	460	2x3-L11TM	3N16	1N16	SL82	SL92
	Masonry veneer	—	—	—	—	—	—
	Articulated full masonry	—	—	—	—	—	—
	Full masonry	—	—	—	—	—	—

NOTE: S/S refers to single-storey construction.

FIGURE 3.4 (in part) WAFFLE RAFT

Licensed to Mrs Cathie Thompson on 17 September 2012. 1 user personal user licence only. Storage, distribution or use on network prohibited (10300097).

3.4.2 Stem width

The minimum stem width shall be 110 mm for clad frame and 150 mm for masonry construction. The minimum width of the base of an external beam shall be 110 mm for clad frame, single-storey articulated masonry veneer and single-storey masonry veneer and 300 mm for two-storey articulated masonry veneer, two-storey masonry veneer, single-storey articulated full masonry and single-storey full masonry.

3.4.3 Reinforcement

Additional reinforcement shall be provided for all beams where the stem width exceeds 150 mm. The size and specification of top bars shall be the same as bottom bars except as specified in Figure 3.4. The total number of reinforcement bars in beams shall be as follows:

Stem width mm	Top bars (additional to slab mesh)	Beam base width mm	Bottom steel
110 to 150	0	110 to 150	1
151 to 220	1	151 to 220	2
221 to 330	2	221 to 330	3
331 to 440	3	331 to 440	4

3.4.4 Construction

Construction details shall be in accordance with Clauses 6.4 and 6.6.

3.4.5 Piers

The waffle raft for a one-storey building for clad frame or masonry veneer on moderately or highly reactive sites may be supported on piers as follows without structural design of the waffle raft:

(a) Piers to be located on the intersection of every third internal beam.

(b) An additional N12 bar at the top to be provided in the internal beams intersecting the piers, but no shear fitments are required.

3.5 STIFFENED SLAB WITH DEEP EDGE BEAM

3.5.1 General

A stiffened slab with edge beam may be used on Class M sites for masonry veneer or articulated masonry veneer construction. Details shall be in accordance with Figure 3.5.

3.5.2 Beam spacing

Beam spacing shall not exceed 5.0 m for masonry veneer construction or 6.0 m for articulated masonry veneer construction.

 © Standards Australia

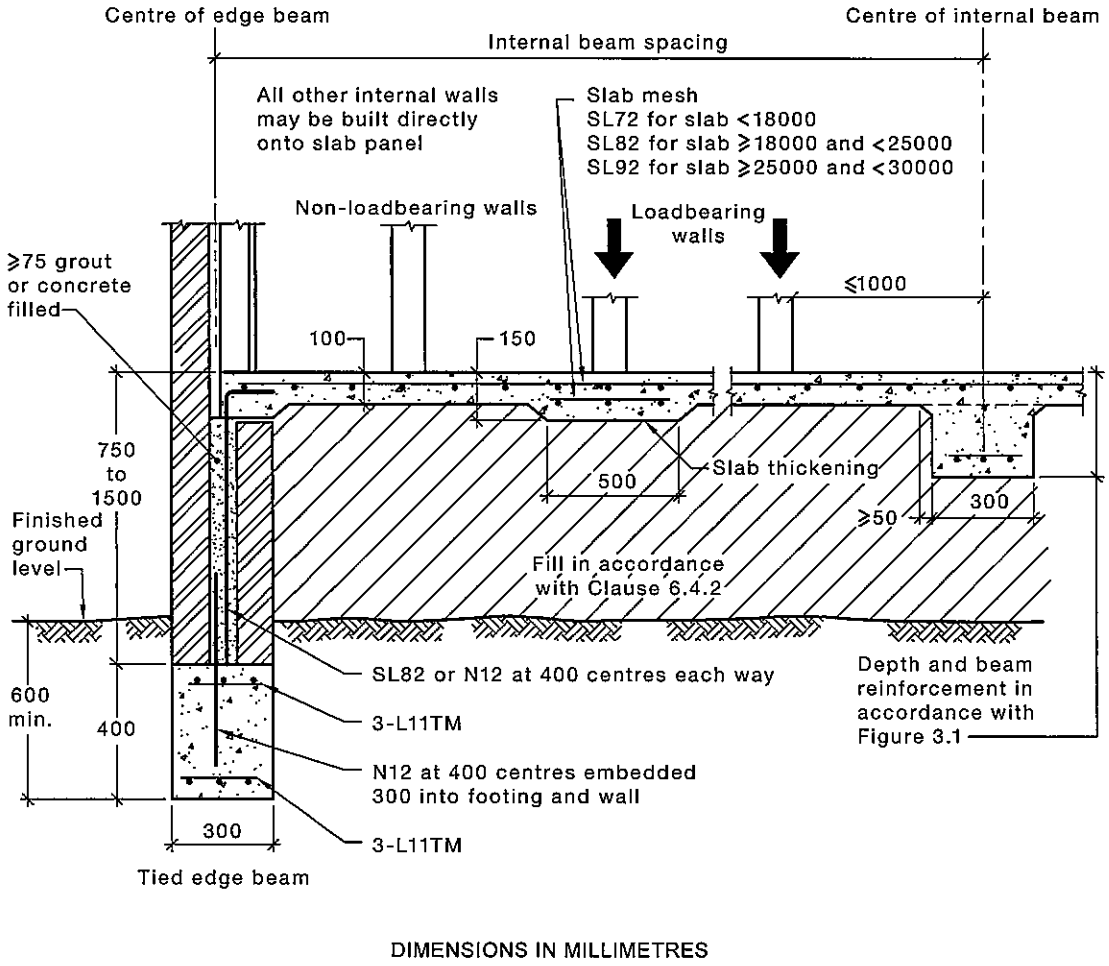

FIGURE 3.5 STIFFENED SLAB WITH DEEP EDGE BEAM FOR MASONRY VENEER AND ARTICULATED MASONRY VENEER CLASS M SITE

3.5.3 Edge wall construction details

The reinforcement of the cavity shall consist of N12 bars at 400 mm centres in each direction, with the vertical bars anchored into both the footing and the slab. The cavity shall be filled with well-compacted 20 MPa concrete, or grout in accordance with AS 3700. Single-leaf reinforced masonry may also be used.

3.5.4 Construction joints

Horizontal construction joints may be used between the beams and the slab, provided the concrete-to-concrete joint is at least 150 mm wide and is traversed by R10 or N10 fitments at 600 mm centres or equivalent reinforcement.

3.6 STRIP FOOTINGS

3.6.1 General

All masonry walls shall be supported on strip footings. Details of strip footings shall be in accordance with Figure 3.6.

NOTE: Figure 3.6 does not include designs for Classes H1-D, H2 or H2-D.

Licensed to Mrs Cathie Thompson on 17 September 2012. 1 user personal user licence only. Storage, distribution or use on network prohibited (10300097).

Licensed to Mrs Cathie Thompson on 17 September 2012. 1 user personal user licence only. Storage, distribution or use on network prohibited (10300097).

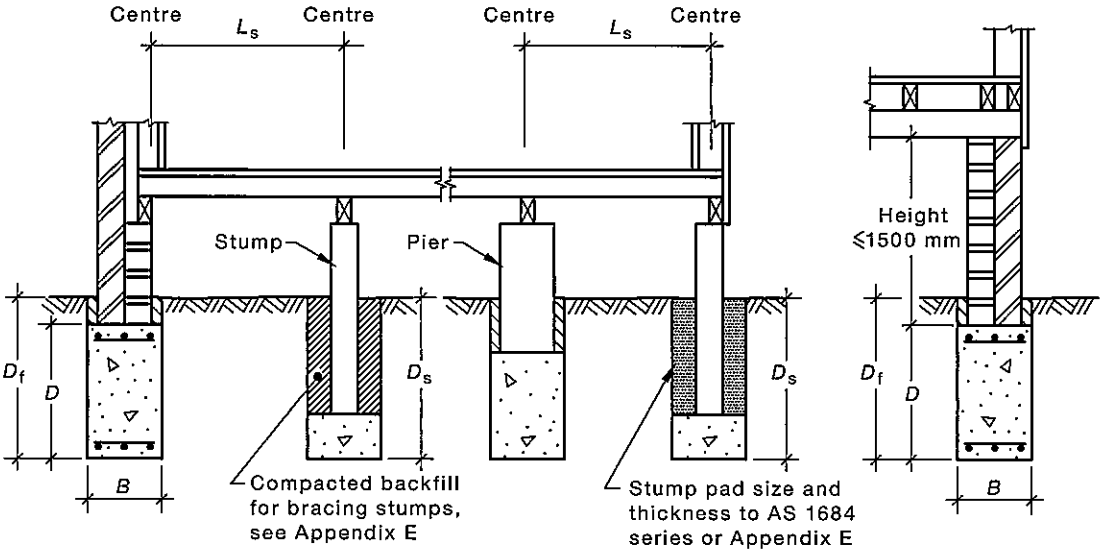

(i) Masonry veneer or articulated masonry veneer

(ii) Clad frame on stumps or piers

(iii) Clad frame on base or dwarf wall

$D_f \geq D+75$

(a) Suspended floors (timber or concrete single-storey construction <4 kPa dead load)

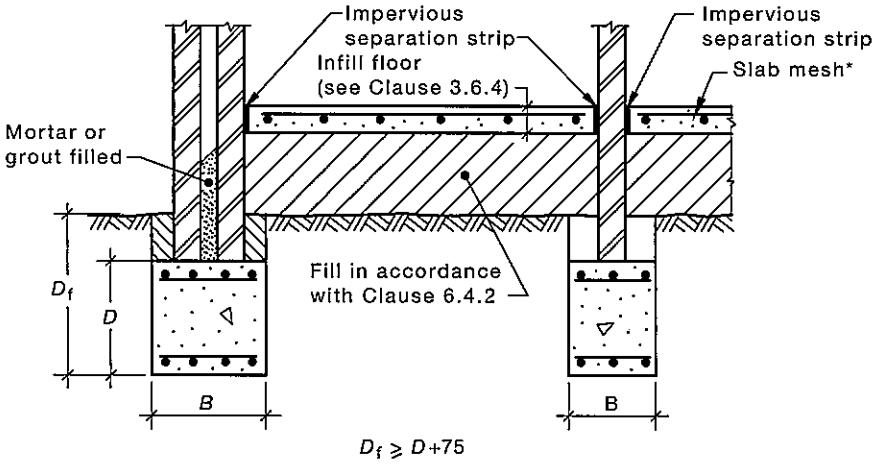

$D_f \geq D+75$

(b) Infill floor Class A and Class S sites

*Slab mesh;
SL62, when slab length <18000
SL72, when slab length ≥18000 and <25000
SL82, when slab length ≥25000 and <30000

DIMENSIONS IN MILLIMETRES

FIGURE 3.6 (in part) STRIP FOOTING SYSTEMS

 © Standards Australia

Licensed to Mrs Cathie Thompson on 17 September 2012. 1 user personal user licence only. Storage, distribution or use on network prohibited (10300097).

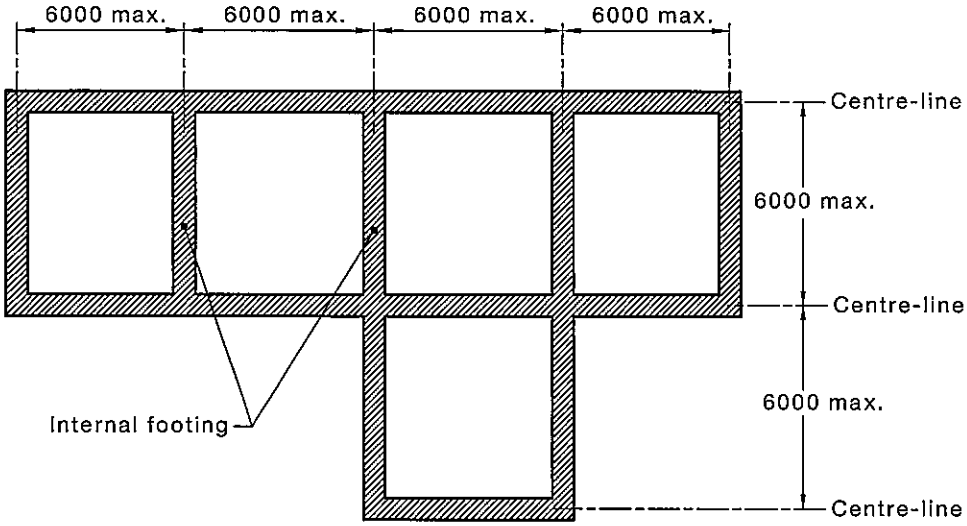

(c) Example of footing system with re-entrant corners

Site class	Type of construction	Depth *(D)*	Width *(B)*	Reinforcement	D_s	L_s
Class A	Clad frame	300	300	3-L8TM	400	—
	Articulated masonry veneer	300	300	3-L8TM	400	—
	Masonry veneer	300	300	3-L8TM	400	—
	Articulated full masonry	300	400	4-L8TM	400	—
	Full masonry	300	400	4-L8TM	400	—
Class S	Clad frame	400	300	3-L8TM	400	—
	Articulated masonry veneer	400	300	3-L8TM	400	—
	Masonry veneer	400	300	3-L8TM	400	—
	Articulated full masonry	400	400	4-L11TM	400	—
	Full masonry	500	400	4-L11TM	400	—
Class M	Clad frame	400	300	3-L11TM	500	—
	Articulated masonry veneer	450	300	3-L11TM	500	—
	Masonry veneer	500	300	3-L12TM	500	—
	Articulated full masonry	600	400	4-L12TM	500	—
	Full masonry	900	400	4-L12TM	500	—
Class M-D	Clad frame	500	300	3-L11TM	800	—
	Articulated masonry veneer	550	300	3-L12TM	800	—
	Masonry veneer	700	300	3-N16	800	—
	Articulated full masonry	1 100	400	4-N16	800	—
Class H1	Clad frame	500	300	3-L11TM	1 000	≥2400
	Articulated masonry veneer	600	300	3-L12TM	1 000	≥2400
	Masonry veneer	850	300	3-N16	1 000	≥2400
	Articulated full masonry	1 100	400	4-N16	1 000	≥2400

DIMENSIONS IN MILLIMETRES

FIGURE 3.6 (in part) STRIP FOOTING SYSTEMS

Licensed to Mrs Cathie Thompson on 17 September 2012. 1 user personal user licence only. Storage, distribution or use on network prohibited (10300097).

3.6.2 Deep beams

All beams 700 mm or deeper, as specified in the table of Figure 3.6, shall be detailed as follows:

(a) Internal footings shall be provided at no more than 6 m centres, and at re-entrant corners to continue the footings to the opposite external footing (see Figure 3.6). Internal strip footings shall be of the same proportions as the external footing and run from external footing to external footing.

(b) 'Side slip joints' consisting of a double layer of polyethylene shall be provided at the sides of the footing only.

3.6.3 Pads and stumps

The size and thickness of pads for stumps or piers shall be selected using AS 1684. Sizes for larger loads shall be selected in accordance with Appendix E.

Bracing forces and uplift forces to stumps shall be detained in accordance with Appendix E.

3.6.4 Infill floors

Infill floors shown in Figure 3.6(b) shall only be used for Class A and Class S sites. Infill floors may be concrete slabs (100 mm thick), brick paving stone flags, or compacted or stabilized earth.

3.6.5 Reinforcement

If strip footings deeper than those required are used, the reinforcement shall be increased to match that specified for the deepened proportions.

Where footings are wider than the specified width, an extra bar of the same bar size is required top and bottom for each 100 mm additional width.

3.7 REINFORCEMENT EQUIVALENCES

The bar sizes given in Table 3.3 are deemed to comply with the requirements for trench mesh reinforcement in beams and footings. L11TM and L12TM may be replaced by RL1118 and RL1218 mesh respectively. Two layers of L8TM may be used as a replacement for L11TM. Where a single layer of trench mesh would be too wide for the footing or beam, multiple layers, bundled together, or equivalent reinforcement shall be used.

Alternative arrangements of beam or footing reinforcement may be used, provided the flexural strength of the section is unimpaired and the ductility requirement is met.

TABLE 3.3

REINFORCING BAR SIZES DEEMED TO BE EQUIVALENT TO TRENCH MESH REINFORCEMENT

Trench mesh	Area of steel, mm^2	Bar alternative	Trench mesh alternative
2-L8TM	91	1-N12	—
3-L8TM	136	2-N12	—
4-L8TM	182	2-N12	2-L11TM
5-L8TM	227	2-N12	3-L11TM
2-L11TM	178	1-N16 or 2-N12	2 × 2-L8TM
3-L11TM	267	3-N12	2 × 3-L8TM
4-L11TM	356	2-N16	2 × 4-L8TM
2-L12TM	222	2-N12	3-L11TM
3-L12TM	333	3-N12	4-L11TM
4-L12TM	444	4-N12	5-L11TM

 © Standards Australia

Licensed to Mrs Cathie Thompson on 17 September 2012. 1 user personal user licence only. Storage, distribution or use on network prohibited (10300097).

3.8 SUSPENDED CONCRETE FLOORS IN ONE-STOREY CONSTRUCTION

Suspended concrete floors in one-storey construction shall be designed in accordance with engineering principles. For short span floors on Class A and Class S sites, the following criteria may be used for design:

(a) Fill used as temporary support need not be controlled or rolled fill.

(b) Internal concrete slabs that are suspended between at least two opposite walls and do not support walls or columns may be 125 mm thickness with SL72 top and SL72 bottom minimum reinforcement, with 20 mm cover top and bottom, for clear spans up to 2.4 m length.

(c) Such floors may be supported on dwarf masonry walls on strip footings.

Where clay is used as temporary fill, it shall be placed at a moisture content that will minimize subsequent swell

3.9 FOOTING SYSTEMS FOR TWO-STOREY CONSTRUCTION WITH SUSPENDED CONCRETE FLOOR

For a two-storey building with a suspended concrete floor at the first floor level, the footing system designs given in Figures 3.1 to 3.6 for Class A and Class S sites may be used, provided that, for the suspended floor—

(a) the thickness is not greater than 175 mm, or the dead load per unit area is not greater than 4 kPa;

(b) the span is less than 5 m; and

(c) the support is on masonry walls at each end with openings not greater than 2.5 m.

In addition, the width given in those figures for the edge beams and footings shall be increased by 100 mm and, where reinforcement is specified, the top and bottom reinforcement shall be increased by one bar of the same diameter.

Where the suspended floor is supported through an internal wall onto the slab panel on the ground, the thickness of the slab panel shall be increased to 200 mm for a width of 500 mm and, where reinforcement is specified, an extra strip containing three wires of the slab mesh placed in the bottom of the thickened section shall be provided.

3.10 FOOTINGS FOR CONCENTRATED LOADS

3.10.1 Footings for columns

Loads from columns shall be supported by—

(a) pad footings, which may be integral with a slab, of the proportions given in Figure 3.6;

(b) edge beams or strip footings; or

(c) slab panels for dead loads less than 15 kN.

On reactive clays, if the supported area is not greater than 20 m^2, concentrated loads from columns shall be supported directly on an edge or internal beam or strip footing.

NOTE: See Note 2 to Figure E1, Appendix E.

On moderately and highly reactive sites, separate footings shall not be used unless the supported construction is structurally isolated from the rest of the building.

3.10.2 Footings for fireplaces on Class A and Class S sites

Fireplaces shall be supported on a pad footing 150 mm thick for one-storey construction or 200 mm thick for two-storey construction. Pad footings shall be reinforced top and bottom with SL72 and extending 300 mm past the edges of the masonry except for any edge flush with the outer wall. This footing may be integral with a slab.

Licensed to Mrs Cathie Thompson on 17 September 2012. 1 user personal user licence only. Storage, distribution or use on network prohibited (10300097).

SECTION 4 DESIGN BY ENGINEERING PRINCIPLES

4.1 GENERAL

To comply with this Standard, slabs or footing systems designed in accordance with engineering principles shall also be designed in accordance with this Section and AS 3600. Where a specific provision given in this Section differs from a similar provision in AS 3600, the provision given in this Section shall apply.

This Section may be used to extend the range of validity of, or to modify, the deemed-to-comply designs contained in Section 3 of this Standard.

4.2 DESIGN CRITERIA

Slabs and footings and associated superstructures shall be designed to satisfy the performance criteria set out in Clause 1.3 when subjected to the loads noted therein.

The tolerable limits for differential movement depend on the form of construction, surface finish and the actual detailing of the superstructure and, in the absence of more specific information, shall be the lesser of the two values given in Table 4.1 for the applicable type of construction.

TABLE 4.1

MAXIMUM DESIGN DIFFERENTIAL FOOTING DEFLECTION (Δ) FOR DESIGN OF FOOTINGS AND RAFTS

Type of construction	Maximum differential deflection, as a function of span, mm	Maximum differential deflection, mm
Clad frame	L/300	40
Articulated masonry veneer	L/400	30
Masonry veneer	L/600	20
Articulated full masonry	L/800	15
Full masonry	L/2000	10

4.3 DESIGN OF FOOTING SYSTEMS

Footing systems shall be designed in accordance with one of the following:

(a) Stiffened raft footing systems supporting a superstructure that relies entirely on the raft to resist cracking (see Clause 4.4 or 4.5).

(b) Shallow footing systems other than stiffened rafts (see Clause 4.6).

(c) Footing systems supporting walls with sufficient strength to span without cracking (see Clause 4.7).

(d) Piered or piled footing systems (see Clause 4.8).

4.4 STIFFENED RAFT FOOTING SYSTEMS

A stiffened raft footing system that supports a superstructure that relies entirely on the raft stiffness to resist movement and cracking shall be proportioned as follows:

(a) The raft structure shall comprise a grid of approximately orthogonal beams structurally connected to a concrete slab.

Licensed to Mrs Cathie Thompson on 17 September 2012. 1 user personal user licence only. Storage, distribution or use on network prohibited (10300097).

(b) For rafts with beams embedded deeper than 1 m in depth, or with connected piers greater than 1 m in depth, the analysis shall consider the influence of skin friction on the sides of the beams or piers according to engineering principles. The uplift resistance of connected piers or anchors shall be taken into account.

(c) The tolerable limits for relative differential movement depend on the form of construction, surface finish and the actual detailing of the superstructure. In the absence of more specific information, the tolerable limit shall be the lesser of the two values given in Table 4.1 for the applicable type of construction.

(d) Where permanent slab joints are used, the design shall consider the variation in section stiffness at the joint location.

(e) The effective total width of the flange for slab beams shall be determined as follows:

(i) In sagging mode (edge heave), the effective total width shall be taken as $B_w + 0.1L$ for an edge beam and $B_w + 0.2L$ for an internal beam.

(ii) In hogging mode (centre heave), the effective total width shall be assessed by the designer as between $B_w + 0.1L$ and $B_w + 1$ m for an edge beam, and $B_w + 0.2L$ and $B_w + 2$ m for an internal beam.

In no case shall the flange width be taken as greater than the distance halfway to the adjacent beams.

(f) From the soil-structure analysis using the action effects given in Clause 1.4, the design bending moment (M^*) at a cross-section and the required stiffness (E × I) may be determined. The stiffness, E × I, of the slab shall be not less than that required by the analysis. In the determination of E × I the value of E shall be taken as 15 000 MPa for N20 concrete and I shall be as defined in AS 3600. The structural design for strength of the cross-section shall satisfy the following:

$$M^* \leq \phi M_u \qquad \ldots 4.4$$

where

M_u = ultimate bending moment strength calculated in accordance with AS 3600

ϕ = strength reduction factor given in AS 3600

NOTE: Two acceptable methods of design (Walsh and Mitchell) using soil structure interaction for stiffened rafts are described in Appendix F.

(g) Internal and external beams shall be arranged in accordance with Clauses 5.3.8 and 5.3.9.

(h) Beam spacing shall be adequate to ensure the structural integrity and stiffness of the raft. The maximum beam spacing shall not exceed 1.25 times the maximum values given in Figure 3.1 for the applicable site classification. For Class E sites, the beam spacing shall not exceed 5 m.

(i) For ductility, the cross-section shall be reinforced so the ultimate strength calculated on the basis of a reinforced section (M_u) is 20% greater than the cracking moment capacity (M_{cr}), where M_{cr} may be determined for sagging moments for 20 MPa concrete using a tensile strength of 2.7 MPa and for hogging moments 1.8 MPa.

(j) Where the calculated shear force exceeds the design strength of the unreinforced section, shear reinforcement shall be required in raft beams. Side face reinforcement is not required in deep raft beams.

Licensed to Mrs Cathie Thompson on 17 September 2012. 1 user personal user licence only. Storage, distribution or use on network prohibited (10300097).

4.5 SIMPLIFIED METHOD FOR RAFT DESIGNS

4.5.1 Application

Stiffened rafts may be designed in accordance with this Clause, provided the design parameters are within the following range:

Design parameter	Range
y_s	10 mm to 70 mm if $H_s > 3$ m *or* 10 mm to 100 mm if $H_s < 3$ m
Δ	5 mm to 50 mm
Span	5 m to 30 m
Beam spacing	≤1.25 values in Figure 3.1 Clause 5.3.9 shall apply at external corners of the building. For Class E sites the beam spacing shall not exceed 5 m.
Beam depth	250 mm to 1200 mm
Minimum depth of any beam	≥0.8 max. beam depth
Beam width	110 mm to 400 mm
Design distributed load	≤10 kPa
Design edge line load	≤25 kN/m

The specified slab mesh shall be not less than SL72 for slab spans <18 m; SL82 for spans ≥18 m and <25 m; and SL92 for spans ≥25 m and the ductility requirements of Clause 4.4(i) shall be satisfied. It is not necessary to use a design stronger than the standard design for the site classification nor is it permitted to use a design weaker than the design given for the next lower site Class.

For types of construction outside the range given in Figure 3.1 and Table 3.1 for which no standard design is appropriate, this method may be used.

4.5.2 Modification procedure

The value of y_s/Δ shall be determined where Δ is the permissible maximum differential movement given in Column 3 of Table 4.1 for the appropriate construction. From Figure 4.1 and the value of y_s/Δ, the design shall provide in each direction the following stiffness parameter:

$$\log\left[\sum\left(\frac{B_w D^3}{12}\right)/W\right]$$

where the summation is determined over all the edge and internal beams, and

B_w = beam web width, in millimetres

D = overall depth of the beam, in millimetres

W = overall width of the slab, in metres, normal to the direction of the beams being considered

The strength shall be provided by the satisfaction of the ductility requirements of Clause 4.4(i). For non-rectangular plans, the design shall be based on overlapping rectangles.

 © Standards Australia

4.6 DESIGN OF FOOTING SYSTEMS OTHER THAN STIFFENED RAFTS

The design of shallow footing systems, other than stiffened rafts, shall be in accordance with the general principles outlined in Clause 4.4, modified to take into account the soil-structure interaction of the footing system. Lift-off shall not be considered in strip footings deeper than 0.6 m.

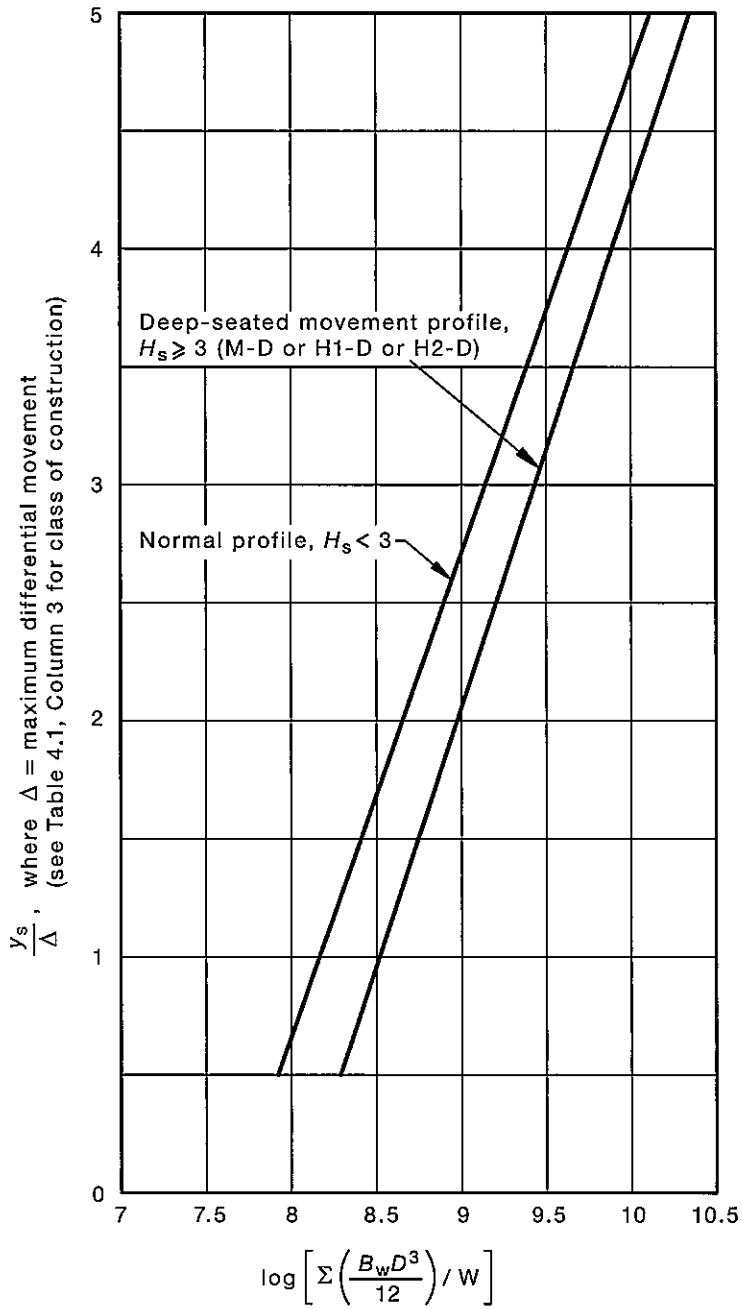

where B_w = width of beam web, in millimetres
D = overall depth of beam, in millimetres
W = overall width of slab, in metres

FIGURE 4.1 MOVEMENT RATIO VERSUS UNIT STIFFNESS

Licensed to Mrs Cathie Thompson on 17 September 2012. 1 user personal user licence only. Storage, distribution or use on network prohibited (10300097).

Licensed to Mrs Cathie Thompson on 17 September 2012. 1 user personal user licence only. Storage, distribution or use on network prohibited (10300097).

4.7 FOOTING SYSTEMS FOR REINFORCED SINGLE–LEAF MASONRY WALLS

For buildings whose walls have sufficient strength to span for significant distances over sagging or hogging footings (either as a cantilever over hogging footings or simply supported over sagging footings), it shall be permissible to proportion the wall-footing system to utilize the flexural strength of the wall.

Design of the masonry shall be in accordance with AS 3700 to resist the action effects derived in this Standard. The required dimensions, reinforcement and disposition of footings shall be designed to satisfy the principles of Clause 4.4 and in accordance with the following:

(a) If the walls are not structurally connected to the footing or slab system, the length over which a particular type of wall can span before it cracks or experiences excessive deflection shall be determined and the footings proportioned to ensure that this length is not exceeded and the potential for the footing to separate from the wall is limited to 5 mm, unless specific provision is made for movement.

(b) If the walls of a building are structurally connected to the footing or slab system by means of steel starter bars, anchors or equivalent, the combined strength and stiffness of the wall and footing/slab system shall be considered to determine the length over which the particular combination can span before it cracks or experiences excessive deflection. The footings, floor and the wall shall be proportioned and reinforced to ensure this length is not exceeded.

The joints between adjacent wall panels shall be designed to accommodate any movement resulting from footing movement. The wall configuration shall be such that each wall is prevented from tilting, twisting or distorting to an extent that limits the serviceability of the building.

In determining the spanning ability, the following points shall be considered:

(i) The effect of increased load from upper floors or roof structure in diminishing this ability to span.

(ii) The strengthening effect (if any) of joint reinforcement in masonry walls.

(iii) The strengthening effect (if any) of steel reinforcement in the cores and bond beams of reinforced or partially reinforced hollow masonry.

(iv) The strengthening effect (if any) of render, plaster, plasterboard or other veneers fixed to the wall.

4.8 DESIGN FOR PILED OR PIERED FOOTING SYSTEMS

A pier-and-beam, pier-and-slab or piled footing system shall be designed in accordance with engineering principles.

NOTE: Design of deep footings should be carried out in accordance with Appendix G.

 © Standards Australia

Licensed to Mrs Cathie Thompson on 17 September 2012. 1 user personal user licence only. Storage, distribution or use on network prohibited (10300097).

SECTION 5 DETAILING REQUIREMENTS

5.1 GENERAL

The detailing of all footing systems designed or selected in accordance with Section 3 or Section 4 shall comply with Clauses 5.2 to 5.5. For highly reactive and extremely reactive sites, detailing shall comply with Clause 5.6.

5.2 DRAINAGE DESIGN REQUIREMENTS

5.2.1 General requirements

The building and site drainage design and height of the floor level above finished ground level may be affected by factors other than structural design requirements. Such factors include the following:

(a) The run-off of water and the influence of local topography.

(b) The effect of excavation or filling.

(c) The possibility of flooding.

(d) The effects of existing and post-construction landscaping.

(e) The level of legal point of stormwater discharge.

(f) Plumbing and drainage requirements.

NOTE: For example, the height of the overflow relief gully relative to the top of the lowest plumbing fixture, and the surrounding ground level (see AS/NZS 3500).

(g) Minimum height from finished ground level to the damp-proof course level.

(h) Termite management.

NOTE: For guidance on termite management, see AS 3660.1.

Surface drainage shall be designed and constructed to avoid water ponding against or near the footing. The ground in the immediate vicinity of the perimeter footing, including the ground uphill from the slab on cut-and-fill sites, shall be graded to fall 50 mm minimum away from the footing over a distance of 1 m and shaped to prevent ponding of water. Where filling is placed adjacent to the building, the filling shall be compacted and graded to ensure drainage of water away from the building.

The requirements of Clause 5.2.2 shall be applied to reduce the possibility of surface water entering living areas.

Alternative drainage systems will be required on zero lot line construction. Any paving shall also be suitably sloped.

5.2.2 Specific requirements for slabs for Class 1 buildings

For Class 1 buildings the minimum height of the slab above finished ground, landscaping or paving level shall be 150 mm, except in the following cases:

(a) In sandy, well-drained areas, the minimum height shall be 100 mm.

(b) Where adjoining paved areas slope away from the building, these heights may be reduced to 50 mm.

(c) These heights may be further reduced locally at entrances that are shielded from the weather.

Licensed to Mrs Cathie Thompson on 17 September 2012. 1 user personal user licence only. Storage, distribution or use on network prohibited (10300097).

5.3 REQUIREMENTS FOR RAFTS AND SLABS

5.3.1 Concrete

The grade of concrete shall be N20 with slump of 100 mm in accordance with AS 1379, with 20 mm maximum nominal aggregate size, or as specified in Clauses 5.5, or as specified by the designer.

5.3.2 Reinforcement

Reinforcement in rafts and slabs shall be placed in accordance with the following:

(a) Minimum concrete cover for the reinforcement shall be 40 mm to unprotected ground, 40 mm to external exposure, 30 mm to a membrane in contact with the ground, and 20 mm to an internal surface.

(b) The slab mesh shall be placed towards the top of the raft or slab (see also Clause 5.5).

(c) Raft or slab mesh shall be lapped as shown in Figure 5.1.

(d) Trench mesh shall have all cross-wires cut flush with the outer main wires. Trench mesh in beams shall be overlapped by the width of the mesh at T- and L-intersections. Trench mesh shall be spliced, where necessary, by a lap of 500 mm.

(e) Reinforcing bars shall have a lap length at splices not less than 500 mm up to a bar diameter of 12 mm, and not less than 700 mm up to a bar diameter of 16 mm. At T- and L-intersections, the bars shall be continued across the full width of the intersection. At L-intersections, one outer bar shall be bent and continued 500 mm, or a bent lap bar 500 mm long shall be provided on each leg.

(f) Service penetrations are permitted through the middle third of the depth of edge and stiffening beams. The effect of other service penetrations shall be taken into account by the provision of extra concrete depth or reinforcement.

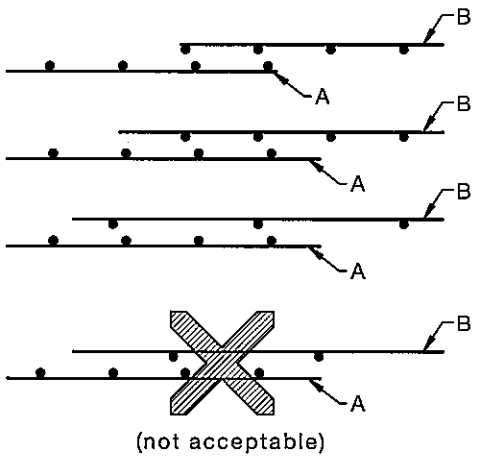

NOTE: The wire orientation is illustrative only.

FIGURE 5.1 ALTERNATIVE METHODS OF LAPPING OF MESH

5.3.3 Vapour barriers and damp-proofing membranes

5.3.3.1 *General*

Where required, the raft or slab shall be provided with a vapour barrier, or a damp-proofing membrane.

NOTE: In South Australia and New South Wales damp-proofing membranes are required. Their use is also recommended in areas prone to rising damp and salt attack.

Licensed to Mrs Cathie Thompson on 17 September 2012. 1 user personal user licence only. Storage, distribution or use on network prohibited (10300097).

5.3.3 Vapour barriers and damp-proofing membranes

5.3.3.1 *General*

Where required, the raft or slab shall be provided with a vapour barrier, or a damp-proofing membrane.

NOTE: In South Australia and New South Wales damp-proofing membranes are required. Their use is also recommended in areas prone to rising damp and salt attack.

5.3.3.2 *Materials*

The materials required for vapour barriers and damp-proofing membranes are as follows:

(a) 200 μm (0.2 mm) thick polyethylene film in accordance with Clause 5.3.3.3, Item (a), as follows:

  (i) *Vapour barrier*—medium impact resistance in accordance with Item 5.3.3.3 (b).

  (ii) *Damp-proofing membrane*—high impact resistance in accordance with Clause 5.3.3.3, Item (b), and resistant to puncture and penetration in accordance with Clause 5.3.3.3, Item (c).

(b) Film branded continuously 'AS 2870 Concrete underlay, 0.2 mm—Medium (or high as appropriate) impact resistance', together with manufacturer or distributors name, trademark or code.

5.3.3.3 *Properties*

Properties specified for vapour barriers and damp-proofing membranes shall be determined by the following methods:

(a) *Film thickness 0.2 mm*—shall be determined using the method of test outlined in AS/NZS 4347.9, except that three tests per metre width of film shall be carried out across the full width of the film, with the resulting mean average thickness to be between 180 μm and 220 μm and a maximum of only one measurement to be below 170 μm for a material pass to be recorded.

(b) *Impact resistance*—shall be determined using the falling dart impact test outlined in AS/NZS 4347.6 and the following:

  (i) Using a load of 180 g for medium impact film and 310 g for high impact film and a drop height of 660 mm, one test shall be carried out on the fold of the film and the film shall not fail.

  (ii) Using a load of 200 g for medium impact film and 340 g for high impact film and a drop height of 660 mm, two tests per metre width of film shall be carried out across the full width of the body of the film and 75% of these tests shall pass for a material pass to be recorded.

(c) *Resistance to puncture and moisture penetration*—shall be determined using the CSIRO 'Method for determination of the penetration resistance of water vapour barriers to falling aggregate'. Vapour permeance following this test shall not exceed 0.02 mg/N.s with no punctures or rips in the film.

5.3.3.4 *Installation*

Both vapour barriers and damp-proofing membranes shall be installed as follows:

(a) The sheet shall be placed beneath the slab so that the bottom surface of the slab and beams, including internal beams, is entirely underlaid. The membrane shall extend under the edge beam to ground level; however, where justified by satisfactory local experience, a vapour barrier may be terminated at the internal face of external beams as shown on Figure 5.2(a).

(b) Lapping for continuity at joints shall be not less than 200 mm.

(c) Penetrations by pipes or plumbing fittings shall be taped or sealed with a close-fitting sleeve or made continuous with the vapour barrier or damp-proof membrane by taping or by lapping in accordance with Item (b).

5.3.4 Edge rebates

Edge rebates for slab on ground, stiffened raft or waffle raft with masonry cavity or veneer construction shall comply with the following:

(a) The rebate depth shall be not less than 20 mm. The edge rebate may be stepped along its length.

(b) Where the edge rebate exceeds 150 mm in depth, the minimum horizontal width of the edge beam at the base of the rebate shall be not less than 200 mm, except that if R10 or N10 ties at 900 mm spacings are provided to resist vertical forces, this minimum width may be reduced to 150 mm. This requirement shall not apply to waffle rafts.

(c) The depth of concrete below the edge rebate shall be not less than 150 mm.

(d) Edge rebates are not required for construction with single-leaf masonry.

(e) Where the edge beams are retaining more than 450 mm of fill, the requirements of Clause 6.5.4 shall apply. Alternatively, the design shall be in accordance with engineering principles.

(f) Where the edge rebate depth is greater than 400 mm, the minimum stem width shall be 200 mm. The effect of the rebate shall be assessed in accordance with engineering principles.

Arrangements of the edge rebate are shown in Figure 5.2.

NOTE: Typical detailing for footings supporting single-leaf masonry walls is shown in the Commentary.

Licensed to Mrs Cathie Thompson on 17 September 2012. 1 user personal user licence only. Storage, distribution or use on network prohibited (10300097).

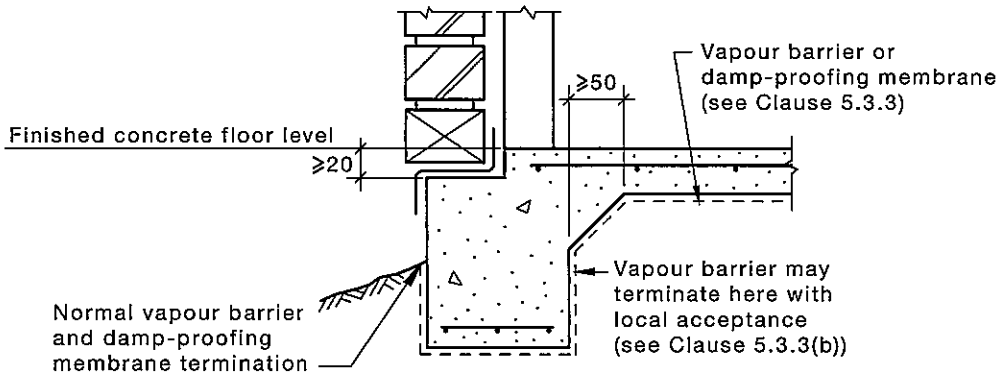

(a) Minimum rebate for cavity masonry or veneer wall

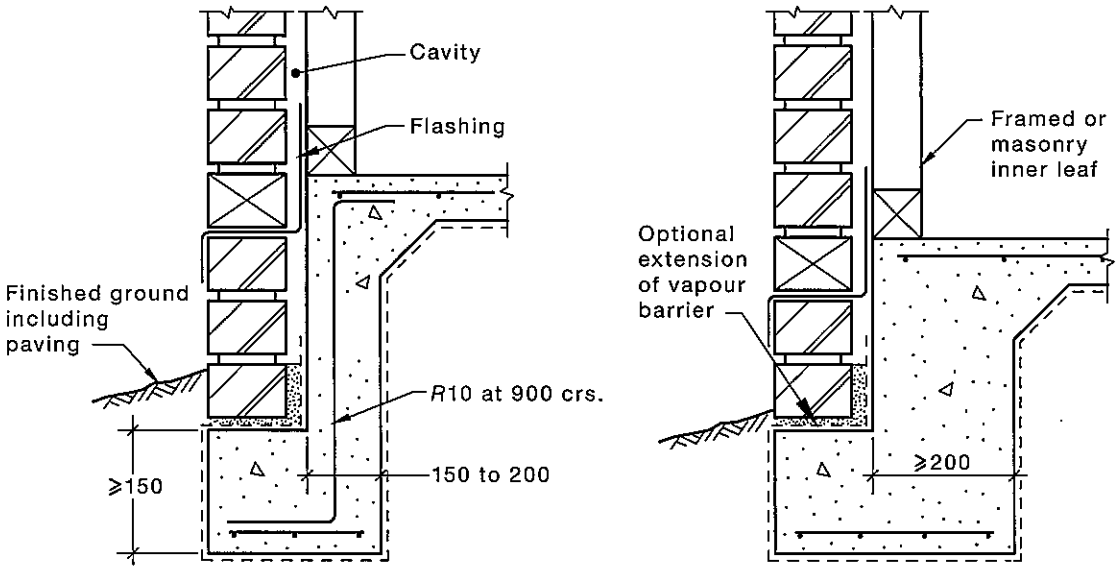

(b) Deep edge rebate alternative

NOTE: The cavity and flashing details shown are diagrammatic only (see AS 3700 and AS 3660.1).

DIMENSIONS IN MILLIMETRES

FIGURE 5.2 EDGE REBATE DETAILS

5.3.5 Recesses in slab panels

Where the raft or slab surface is recessed to provide for services, the soffit of the slab shall be deepened to maintain the required thickness and the reinforcement shall be continuous or lapped as shown in Figure 5.3.

Licensed to Mrs Cathie Thompson on 17 September 2012. 1 user personal user licence only. Storage, distribution or use on network prohibited (10300097).

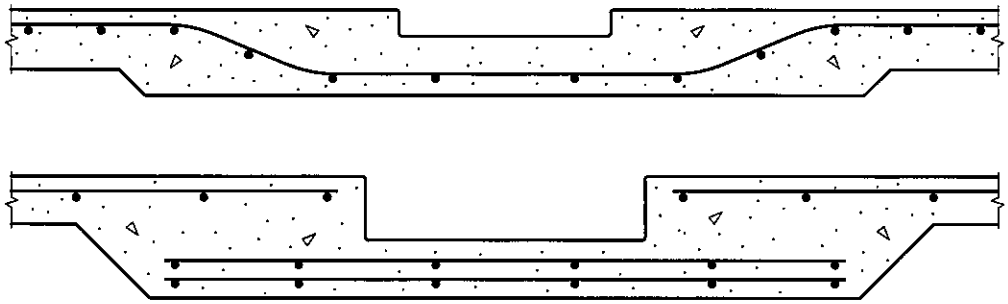

FIGURE 5.3 SLAB DETAIL AT A RECESS

5.3.6 Heating cables and pipes

Electric heating cables may be embedded in the slab without any increase in thickness or reinforcement.

Where hot water heating pipes are to be embedded in a slab, the slab thickness shall be increased by 25 mm and an increase made in the mesh of one level. (For example, SL72 for SL62, SL82 for SL72 and SL92 for SL82.) The mesh shall be placed at a suitable level to accommodate the pipes, subject to the requirements of Clause 5.3.2 (a).

5.3.7 Shrinkage cracking control

At re-entrant corners, two strips of 3-L8TM, or one strip of 3-L11TM or 3-N12 bar, shall be placed across the direction of potential cracking. All such reinforcement shall have a minimum length of 2 m.

Where brittle floor coverings are to be used over an area greater than 16 m^2, extra measures shall be taken to control shrinkage cracking. Such measures shall include one or more of the following:

(a) The amount of slab reinforcement in that part of the slab on which brittle finishes are to be applied shall be not less than SL92 or equivalent. Alternatively, an additional sheet of slab mesh shall be placed in those areas.

(b) The bedding system for brittle coverings shall be selected on the basis of the expected slab movement and the characteristics of the floor covering.

(c) The placement of floor coverings shall be delayed.

NOTE: A minimum period of three-months drying of the concrete is usually required before the placement of brittle floor coverings. Appendix B discusses performance criteria and foundation maintenance.

5.3.8 Beam continuity in rafts

Where the raft design includes internal beams, the structural continuity of internal and external beams in stiffened rafts, including waffle rafts, shall be maintained in accordance with the following criteria.

Internal beams shall be continuous from edge to edge of the slab. Where beams are at different levels, as may occur in two-pour systems, special detailing is required to provide continuity. The requirements apply to stiffened rafts, including waffle rafts. Internal beams shall be located to provide continuity with the edge beams at re-entrant corners. Where one side of the re-entrant corner is less than 1.5 m, any one of the details specified in Figure 5.4 is deemed to provide continuity of beams.

At a re-entrant corner where an external beam continues as an internal beam, the external beam details shall be continued for a length of 1 m into the internal beam.

Licensed to Mrs Cathie Thompson on 17 September 2012. 1 user personal user licence only. Storage, distribution or use on network prohibited (10300097).

Where the footprint of the building includes courtyards or indentations resulting in discontinuity of internal or external stiffening beams, the overall strength and stiffness of the raft shall be maintained by the addition of either strip footings or additional stiffening beams.

NOTE: Examples are included in the Commentary.

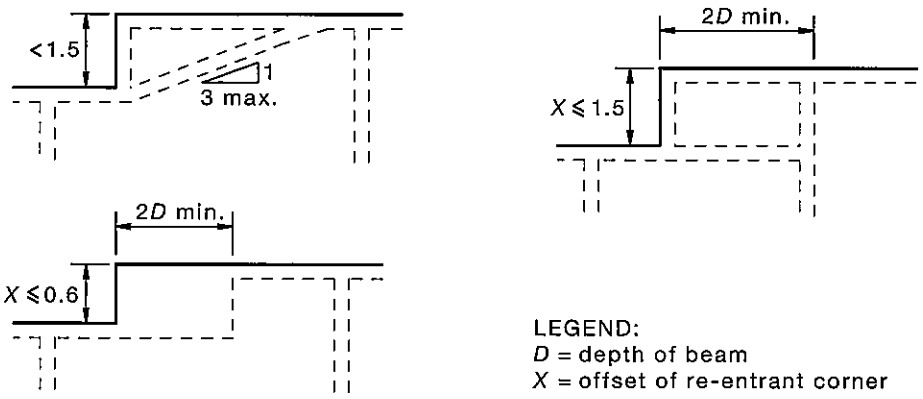

DIMENSIONS IN METRES

FIGURE 5.4 CONTINUITY OF FOOTING BEAMS

5.3.9 Beam layout restrictions

Where the raft design includes internal beams, at all external corners the maximum distance between the corner and the intersection of the first internal beam with the edge beam shall be 4.0 m, as shown in Figure 5.5.

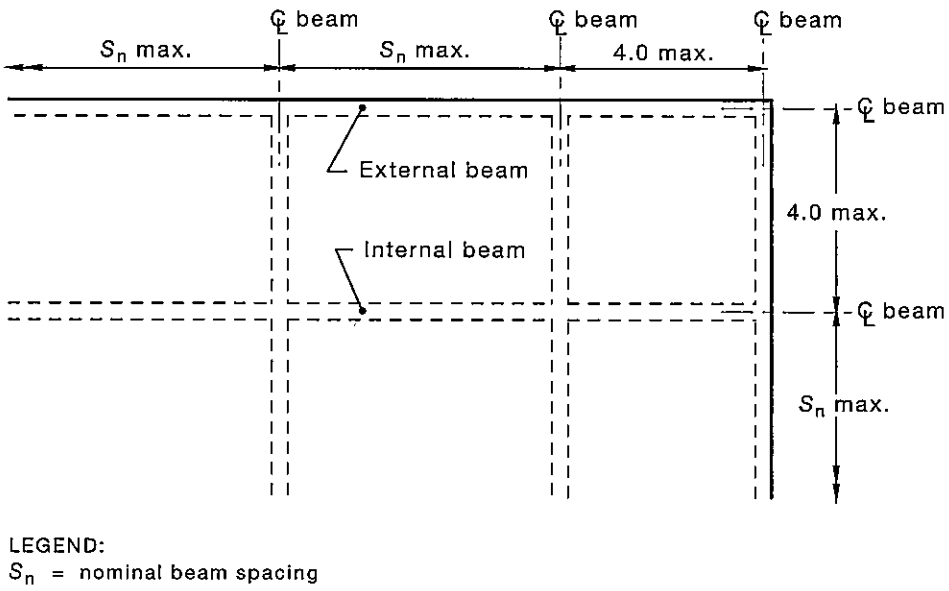

DIMENSIONS IN METRES

FIGURE 5.5 BEAM SPACING AT EXTERNAL CORNERS

Licensed to Mrs Cathie Thompson on 17 September 2012. 1 user personal user licence only. Storage, distribution or use on network prohibited (10300097).

Licensed to Mrs Cathie Thompson on 17 September 2012. 1 user personal user licence only. Storage, distribution or use on network prohibited (10300097).

5.4 REQUIREMENTS FOR PAD AND STRIP FOOTINGS

5.4.1 Concrete

The grade of concrete shall be N20 with slump of 100 mm in accordance with AS 1379, with 20 mm maximum nominal aggregate size, or as provided in Clause 5.5, or as specified by the designer.

5.4.2 Reinforcement

Reinforcement in pad and strip footings shall comply with the following:

(a) Trench mesh reinforcement may be replaced by the equivalent reinforcing bars.

(b) Design cover to the reinforcement shall be 40 mm.

(c) Trench mesh in footings shall be anchored by the width of the mesh at T-intersections and L-intersections and shall be lapped by 500 mm at splices.

(d) The lap length of bar splices shall be not less than 500 mm. At T-intersections and L-intersections, the bars shall continue across the full width of the intersection. At L-intersections, one outer bar shall be bent and continued for 500 mm, or a bent lap bar 500 mm long shall be provided on each leg.

(e) Service penetrations are permitted through the middle third of the depth of the footing. The effect of other footing penetrations shall be taken into account by the provision of extra concrete depth or reinforcement.

5.4.3 Stepping of strip footings

The base of a strip footing shall be horizontal or at a slope of not more than 1:10, or the footing shall be stepped in accordance with one of the methods given in Figure 5.6.

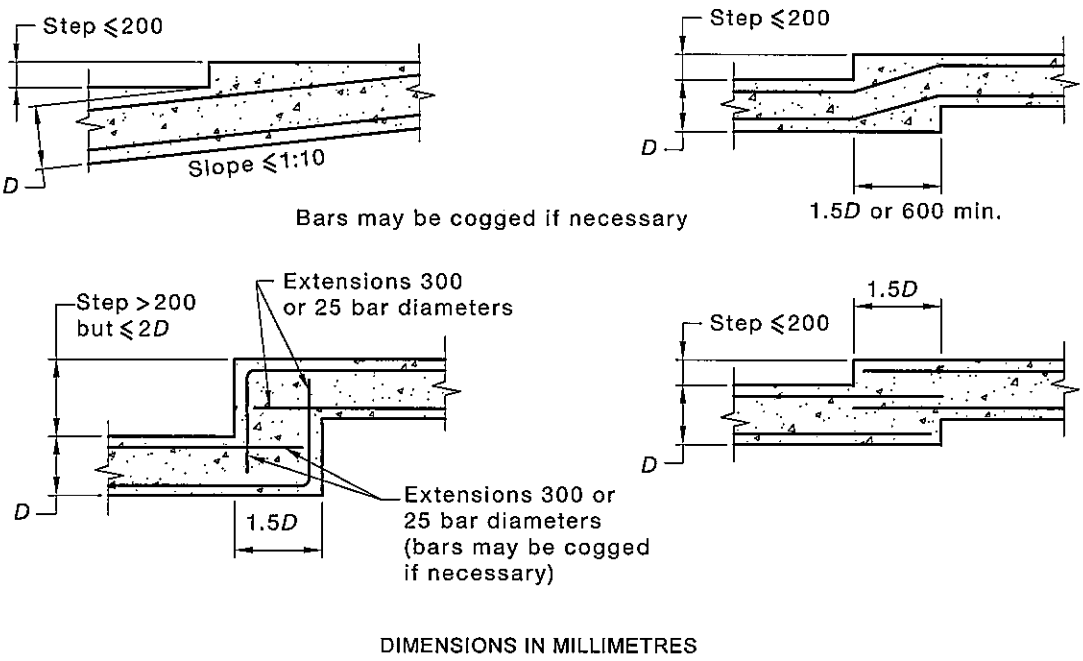

FIGURE 5.6 ACCEPTABLE METHODS OF STEPPING STRIP FOOTINGS

Licensed to Mrs Cathie Thompson on 17 September 2012. 1 user personal user licence only. Storage, distribution or use on network prohibited (10300097).

5.5 REQUIREMENTS IN AGGRESSIVE SOILS

5.5.1 General

In buildings with masonry and/or concrete surfaces exposed to saline soils or to acid sulfate soils with a magnesium content of 1000 ppm or more, the concrete raft, slab, strip or pad footing shall be protected from the aggressive soil or groundwater by—

(a) the isolation of the concrete or masonry member from the aggressive soil in accordance with Clause 5.5.2, or

(b) the application of the concrete strength and detailing requirements of Clause 5.5.3.

NOTE: In highly saline areas the likelihood of damage will be reduced if the requirements of both Clauses 5.5.2 and 5.5.3 are implemented. For acid sulfate and sulfate soils, additional recommendations are given in the Commentary.

5.5.2 Isolation of concrete from the ground

The concrete member shall be isolated from the aggressive soil or groundwater by a damp-proofing membrane in accordance with Clause 5.3.3, installed and terminated in accordance with one of the following:

(a) Terminated at or below finished ground or paving level as shown in Figure 5.7.

(b) Installed and terminated at finished ground or paving level and lapped with a suitable 0.5 mm thick damp-proofing material complying with AS/NZS 2904 and lapped a minimum of 75 mm vertically or horizontally in accordance with Figure 5.7. The damp-proofing material shall extend up to the finished ground or paving level, and be sealed around all penetrations by pipes or plumbing fittings.

NOTE: A suitable 0.5 mm thick damp-proofing material may be embossed black polythene film of high impact resistance of 0.5 mm thickness prior to embossing and meeting the requirements of AS/NZS 2904.

(c) Installed and terminated at below finished ground or paving level and lapped a minimum 75 mm with a suitable liquid-applied waterproofing compound applied to the face of the concrete. The liquid-applied waterproofing compound shall extend up to the finished ground or paving level and be sealed around all penetrations by pipes or plumbing fittings (see Figure 5.7).

NOTE: A damp-proofing material may be used in addition to the liquid-applied coating during construction to avoid damage to the coating.

Where the damp-proofing membrane is damaged during installation, or the finished ground or paving level is altered, the provisions of either Item (b) or (c) shall be complied with.

Where a damp-proofing membrane is installed, a layer of bedding sand shall be provided under the slab panels. Where this layer is deeper than 100 mm, it shall comply with Clause 6.4.2.

Licensed to Mrs Cathie Thompson on 17 September 2012. 1 user personal user licence only. Storage, distribution or use on network prohibited (10300097).

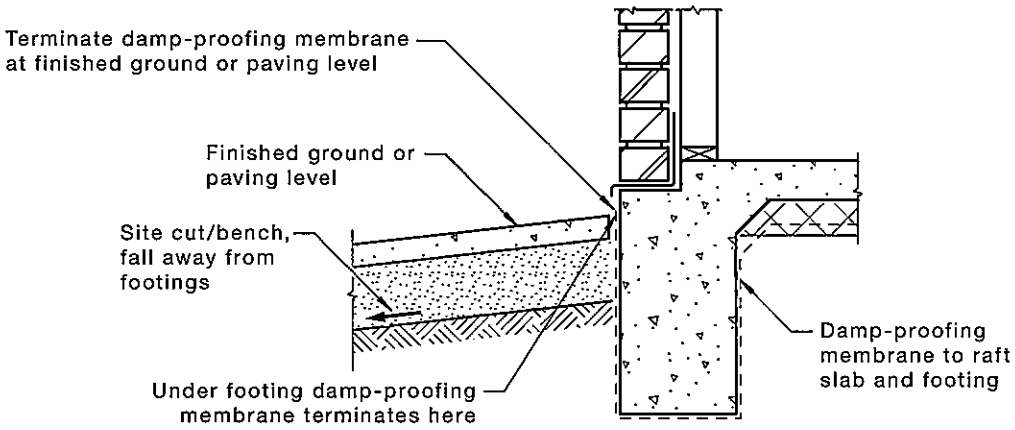

(a) Stiffened raft in accordance with Clause 5.5.2(a)

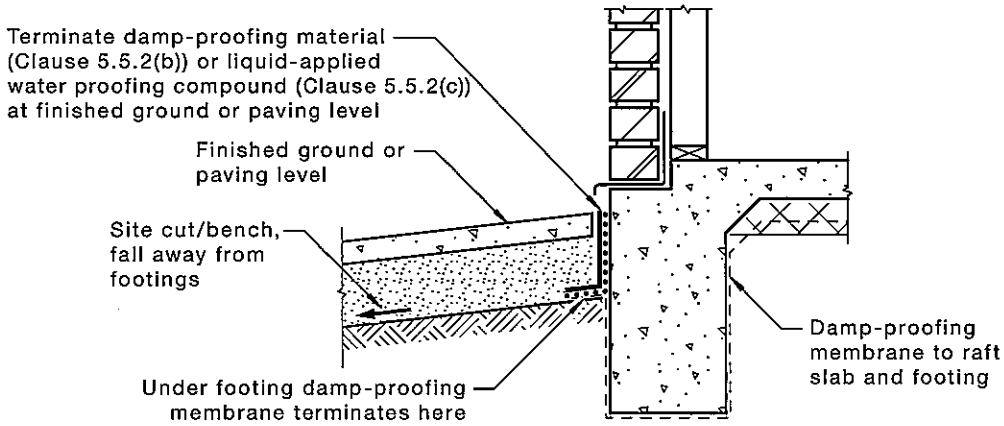

(b) Stiffened raft in accordance with Clause 5.5.2(b) or 5.5.2(c)

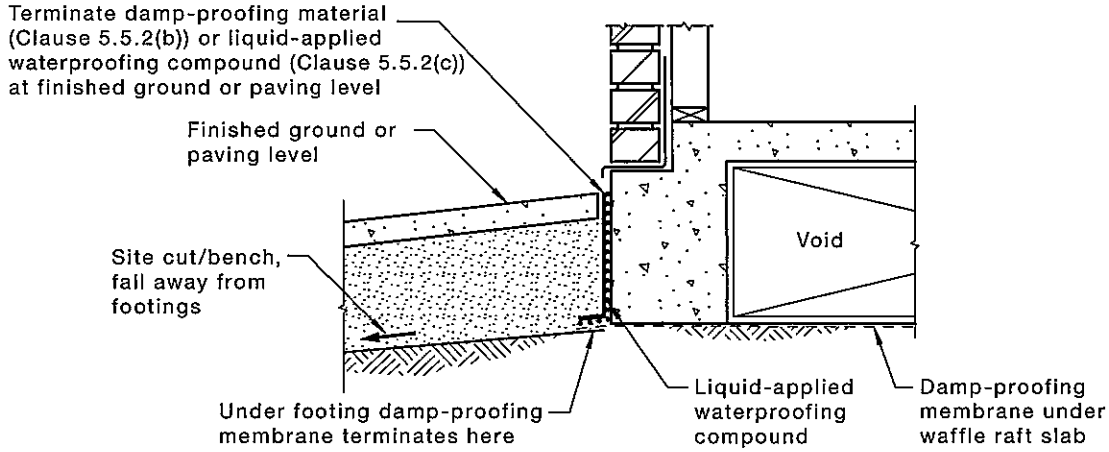

(c) Waffle raft in accordance with Clause 5.5.2(b) or 5.5.2(c)

FIGURE 5.7 USE OF DAMP-PROOFING MEMBRANE FOR SLAB PROTECTION

 © Standards Australia

Licensed to Mrs Cathie Thompson on 17 September 2012. 1 user personal user licence only. Storage, distribution or use on network prohibited (10300097).

5.5.3 Concrete strength and detailing requirements

Concrete strength and detailing requirements shall be as follows:

(a) The exposure classification of the concrete in saline soils shall be in accordance with Table 5.1, where EC_e is the saturated electrical conductivity of a soil water extract.

(b) The exposure classification of the concrete in acid sulfate soils and sulfate soils shall be in accordance with Table 5.2.

(c) The concrete strength and curing requirements shall be as specified in Table 5.3. All concrete, including exposed edges of slabs or edge beams, shall be cured for the minimum period specified.

(d) Curing shall be achieved by the application of water to, or the retention of water in, the freshly cast concrete and shall commence as soon as practicable after finishing of any unformed surfaces has been completed. Where the retention of water in the fresh concrete relies on the application to exposed surfaces of sprayed membrane-forming curing compounds, the compounds used shall comply with AS 3799.

(e) A raft, waffle raft or slab shall be provided with a vapour barrier or damp-proofing membrane complying with the requirements of Clause 5.3.3 and installed in accordance with the details shown in Figure 5.9.

(f) All concrete shall be adequately compacted.

(g) The minimum reinforcement cover for concrete members in contact with the ground or protected by a vapour barrier shall be as specified in Table 5.4.

TABLE 5.1

EXPOSURE CLASSIFICATION FOR CONCRETE IN SALINE SOILS

Saturated extract electrical conductivity (EC_e), dS/m	Exposure classification
<4	A1
4–8	A2
8–16	B1
>16	B2

NOTES:

1 Guidance on concrete in saline environments can be found in CCAA T56.

2 Exposure classifications are from AS 3600.

3 The currently accepted method of determining the salinity level of the soil is by measuring the extract electrical conductivity (EC) of a soil and water mixture in deciSiemens per metre (dS/m) and using conversion factors that allow for the soil texture, to determine the saturated extract electrical conductivity (EC_e).

4 The division between a non-saline and saline soil is generally regarded as an EC_e value of 4dS/m, therefore no increase in the minimum concrete strength is required below this value.

Licensed to Mrs Cathie Thompson on 17 September 2012. 1 user personal user licence only. Storage, distribution or use on network prohibited (10300097).

TABLE 5.2

EXPOSURE CLASSIFICATION FOR CONCRETE IN SULFATE SOILS

Exposure conditions			Exposure classification	
Sulfates (expressed as SO_4)*		pH	Soil conditions A†	Soil conditions B‡
In soil ppm	In groundwater ppm			
<5000	<1000	>5.5	A2	A1
5000–10 000	1000–3000	4.5–5.5	B1	A2
10 000–20 000	3000–10 000	4–4.5	B2	B1
>20 000	>10 000	<4	C2	B2

* Approximately 100 ppm SO_4 = 80 ppm SO_3

† Soil conditions A—high permeability soils (e.g., sands and gravels) that are in groundwater

‡ Soil conditions B—low permeability soils (e.g., silts and clays) or all soils above groundwater

TABLE 5.3

MINIMUM DESIGN CHARACTERISTIC STRENGTH (f'_c) AND CURING REQUIREMENTS FOR CONCRETE

Exposure classification	Minimum f'_c MPa	Minimum initial curing requirement
A1	20	Cure continuously for at least 3 days
A2	25	
B1	32	Cure continuously for at least 7 days
B2	40	
C1	≥50	
C2	≥50	

TABLE 5.4

MINIMUM REINFORCEMENT COVER FOR CONCRETE

Exposure classification	Minimum cover in saline soils* mm	Minimum cover in sulfate soils† (mm)
A1	See Clause 5.3.2	40
A2	45	50
B1	50	60
B2	55	65
C1	‡	70
C2	‡	85

* Where a damp-proofing membrane is installed, the minimum reinforcement cover in saline soils may be reduced to 30 mm.

† Where a damp-proofing membrane is installed, the minimum reinforcement cover in sulfate soils may be reduced by 10 mm.

‡ Saline soils have a maximum exposure classification of B2 as per Table 5.1.

 © Standards Australia

Licensed to Mrs Cathie Thompson on 17 September 2012. 1 user personal user licence only. Storage, distribution or use on network prohibited (10300097).

5.6 ADDITIONAL REQUIREMENTS FOR CLASSES M, H1, H2 AND E SITES

5.6.1 Masonry detailing

The following aspects of masonry detailing shall be used to reduce the effects of movement:

(a) Extensions shall be isolated from the original structure by means of control joints to allow for differential movement.

(b) In masonry construction, control joints shall be introduced at abrupt changes in profile such as at large openings or near corners except where the wall is designed to be reinforced masonry.

5.6.2 Variations in foundation material

If the footing or slab is partly on rock and partly on reactive clay, structural continuity of the entire footing shall be maintained and allowance shall be made for potential movement in the superstructure near the junction of foundation types (see also Clauses 3.1.6, 3.1.7 and 3.1.8).

5.6.3 Drainage requirements

Buildings on moderately, highly or extremely reactive sites shall be provided with drainage systems designed in accordance with the following:

(a) Surface drainage shall be considered in the design of the footing system and necessary modification shall be included in the design documentation. Surface drainage of the site shall be controlled from the start of site preparation and construction. The drainage system shall be completed by the finish of construction of the building.

(b) The base of trenches shall be sloped away from the building. Trenches shall be backfilled with clay in the top 300 mm within 1.5 m of the building. The clay used for backfilling shall be compacted. Where pipes pass under the footing system, the trench shall be backfilled full depth with clay or concrete to restrict the ingress of water beneath the footing system.

(c) Where pipes pass under the footing system, the trench shall be backfilled full depth with clay to act as a barrier to the ingress of water beneath the footing system. Alternatively, a plastic membrane across the cross-section of the trench, taped to the pipe and keyed into the sides and base of the trench may be used.

(d) Subsurface drains to remove groundwater shall not be used within 1.5 m of the building unless designed in accordance with engineering principles.

5.6.4 Plumbing requirements

Buildings on highly or extremely reactive sites shall be provided with a system of plumbing detailed in accordance with the following:

(a) Penetrations of the edge beams of a raft and perimeter strip footings shall be avoided where practicable, but where necessary shall be detailed to allow for movement.

Closed-cell polyethylene lagging shall be used around all stormwater and sanitary plumbing drain pipe penetrations through footings. The lagging shall be a minimum of 20 mm thick on Class H1 sites and 40 mm thick on Class H2 and Class E sites. Vertical penetrations do not require lagging.

NOTE: Sleeves allowing equivalent movements may be used as an alternative to the lagging.

(b) Drains attached to or emerging from underneath the building shall incorporate flexible joints immediately outside the footing and commencing within 1 m of the building perimeter to accommodate a total range of differential movement in any direction equal to the estimated characteristic surface movement of the site (y_s). In the absence of specific design guidance, the fittings or other devices that are provided to allow for the movement shall be set at the mid-position of their range of possible movement at the time of installation, so as to allow for movement equal to $0.5y_s$ in any direction from the initial setting. This requirement applies to all stormwater and sanitary plumbing drains and discharge pipes.

(c) On-site wastewater treatment units and associated land application areas shall be located to minimize soil moisture increase within the foundation.

(d) Drainage under a slab shall be avoided where practicable.

NOTES:

1 Pipes may be encased in concrete or in recesses in the slab when provided with flexible joints at the exterior of the slab.

2 Methods used should comply with the AS/NZS 3500 series.

(e) Cold water pipes and heated or hot water pipes shall not be installed under a slab, unless the pipes are installed within a conduit so that if the pipe leaks water it will be noticed above the slab or outside the slab and will not leak unnoticed under the slab.

NOTE: Water service pipes installed under concrete slabs should comply with the relevant requirements of AS/NZS 3500.1. Heated water service pipes installed under concrete slabs should comply with the relevant requirements of AS/NZS 3500.4.

Licensed to Mrs Cathie Thompson on 17 September 2012. 1 user personal user licence only. Storage, distribution or use on network prohibited (10300097).

Licensed to Mrs Cathie Thompson on 17 September 2012. 1 user personal user licence only. Storage, distribution or use on network prohibited (10300097).

SECTION 6 CONSTRUCTION REQUIREMENTS

6.1 GENERAL

The construction of footing systems designed in accordance with Sections 3, 4 and 5 shall comply with Clauses 6.2 to 6.5. For moderately, highly and extremely reactive sites, additional requirements are given in Clause 6.6.

6.2 PERMANENT EXCAVATIONS

Any vertical or near-vertical permanent excavation within 2 m of the building and deeper than 0.6 m in material other than rock shall be adequately retained or battered. The effects of excavations on drainage or foundation drying shall be considered.

6.3 TEMPORARY EXCAVATIONS

Temporary excavations in the area of the footing shall be carried out only where adequate support for the footing system is maintained. Examples of such temporary excavation include levelling of the building platform and trenching for services.

Where it is expected that future excavation in the area of the footing system may be required for maintenance of underground services, provision shall be made for continued support of the footings, for example by provision of piers to beneath the expected excavation level.

NOTE: Excavations should not extend below a line drawn 30° to the horizontal for sand, or 45° to the horizontal for clay, from the bottom edge of the edge beam, strip footing or pier without prior assessment in accordance with engineering principles.

6.4 CONSTRUCTION OF SLABS

6.4.1 General

The construction of slab footing systems including slab on ground, footing slab, stiffened slab with deep edge beam, stiffened raft and waffle raft shall comply with the requirements of Section 5 and of this Clause. For Classes H1, H2 and E sites additional requirements are given in Clause 6.6.

The methods given for construction on sloping sites assume that the site is not subject to landslip.

6.4.2 Filling

Filling used for the support of a slab shall be controlled fill or rolled fill as follows:

(a) *Controlled fill* Sand fill up to 0.8 m deep that is well compacted by a vibrating plate or vibrating roller in layers not more than 0.3 m thick is deemed to be controlled fill. For sand fill not containing gravel-sized material a blow count of 7 or more per 0.3 m using the penetrometer test described in AS 1289.6.3.3 is deemed to satisfy this requirement.

Non-sand fill up to 0.4 m deep that is well compacted by a mechanical roller in layers not more than 0.15 m thick is deemed to be controlled fill. Clay fill shall be moist during compaction.

(b) *Rolled fill* Rolled fill consists of material compacted in layers by repeated rolling with an excavator or similar equipment. The depth of rolled fill shall not exceed 0.6 m compacted in layers not more than 0.3 m thick for sand material or 0.3 m compacted in layers not more than 0.15 m thick for other material.

NOTE: The depths of fill given in this Clause are the depths measured after compaction.

6.4.3 Foundation for slabs

The foundation shall satisfy the following:

(a) Top soil containing grass roots or other organic material shall be removed from the area on which the slab is to rest.

(b) On sites subject to wind or water erosion, the foundation of the edge beam or footing shall be protected.

(c) The following apply to the foundation for slabs, including edge and internal beams:

(i) Where slab panels, edge beams, internal beams and load-support thickenings are to be supported on natural soil, the bearing capacity of the soil shall be not less than 50 kPa.

NOTE: Slab panels, internal beams and load support thickenings may be founded on controlled or rolled fill.

(ii) Edge beams may be founded on controlled fill. This fill shall continue past the edge of the building by at least 1 m and shall be retained or battered beyond this point by a slope not steeper than 1:2. Edge beams shall not be founded on rolled fill.

(iii) Edge footings not tied to a footing slab [see Figures 3.2 and 3.3 (b)] shall be founded in natural soil with a bearing capacity of 100 kPa or may be founded on controlled sand fill on a Class A or Class S site.

(d) The bases of edge beams and footings may be stepped or sloped not more than 1:10.

(e) Except for sites with aggressive soils as detailed in Clause 5.5.2, a blinding layer of sand is not required. Where used, the blinding layer of sand shall comply with Clause 6.4.2 if deeper than 100 mm.

6.4.4 Treatment of sloping sites

The treatment of slabs on cut-and-fill sloping sites shall comply with one of the following methods:

(a) The site shall be cut and filled and the fill [see Figures 6.1(a) and 6.1(b)] shall continue past the edge of the building by at least 1 m and shall be retained or battered beyond this point by a slope protected from erosion and not steeper than 1:2. The interior of the slab shall be founded on compacted material satisfying the requirements of Clause 6.4.3(c). The edge beams shall be founded on natural soil or on controlled fill or may be supported by piers designed in accordance with engineering principles.

(b) The site shall be cut and filled with fill material that satisfies the requirements of Clause 6.4.3(c) and the fill shall be retained at the edge in accordance with Clause 6.4.5 as shown in Figure 6.1(c).

Licensed to Mrs Cathie Thompson on 17 September 2012. 1 user personal user licence only. Storage, distribution or use on network prohibited (10300097).

(c) The slab and beams may be stepped in combination with methods in Item (a) or (b) above and with Figure 6.1(c) to reduce the extent of excavation or fill. At a change in elevation, the step shall comply with the following:

(i) The ground behind the step shall be drained to prevent moisture build-up and the face of the slab step against the soil shall be waterproofed.

(ii) The edge rebate requirements of Clause 5.3.4 shall be incorporated in the construction.

(iii) Steps in stiffened rafts, including waffle rafts, shall be designed to preserve the structural continuity of the footing system.

(iv) Steps in slabs for Class A and Class S sites shall comply with Figure 6.2 where the height of the step is less than 1.2 m. The masonry retaining wall shown in Figure 6.2 shall comply with Clause 6.4.5(b). Steps in beams shall comply with the principles of Clause 5.4.3.

(d) The site shall be cut and filled and, where the fill does not satisfy Clause 6.4.2, the slab shall be designed as pier-and-slab in accordance with the following:

(i) The suspended slab shall be designed in accordance with AS 3600.

(ii) On Class M, Class H1 or Class H2 sites, the strength and stiffness of the suspended slab shall be not less than required by Section 3.

Where the fill consists of reactive clay, the fill shall be placed in a moist condition to minimize subsequent reactive soil movements.

NOTE: On natural slopes greater than 1:8, benching and consideration of slope stability may be required.

Licensed to Mrs Cathie Thompson on 17 September 2012. 1 user personal user licence only. Storage, distribution or use on network prohibited (10300097).

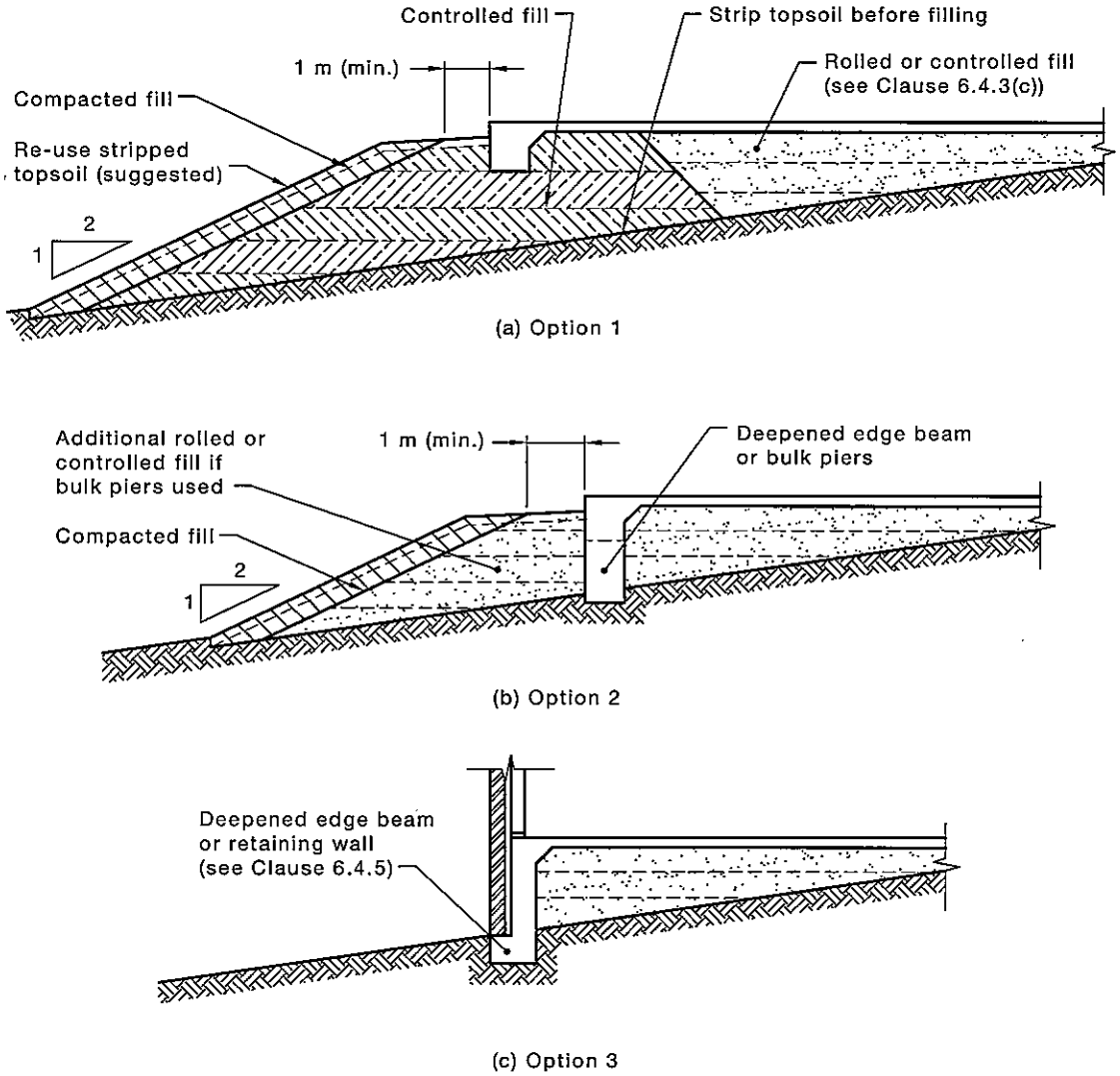

FIGURE 6.1 FILL AND SLAB EDGE OPTIONS FOR LOW SIDE OF SLOPED SITES

Licensed to Mrs Cathie Thompson on 17 September 2012. 1 user personal user licence only. Storage, distribution or use on network prohibited (10300097).

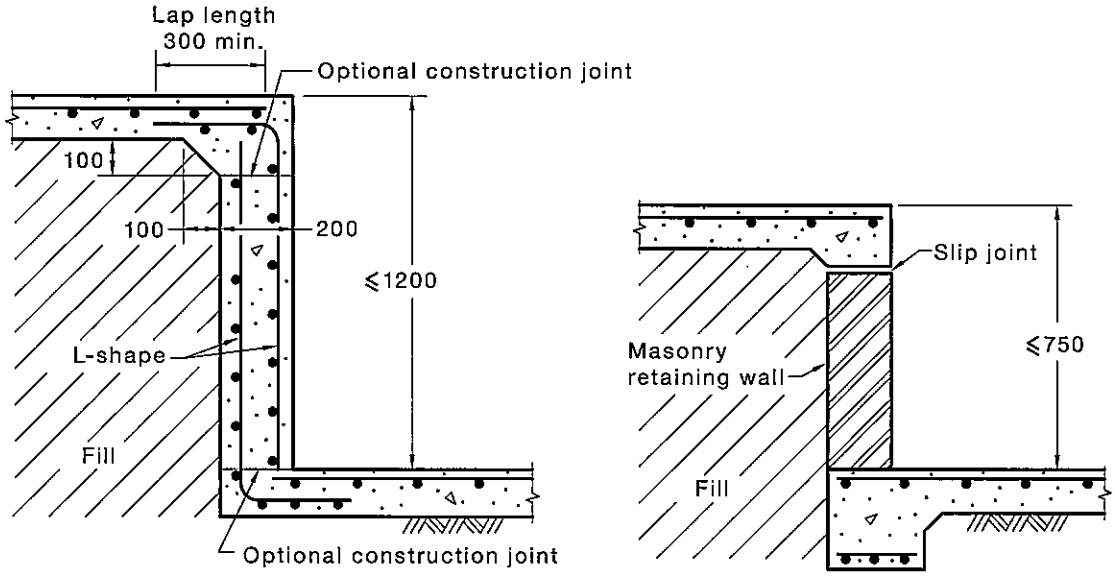

NOTE: Drainage provision should be made.

DIMENSIONS IN MILLIMETRES

FIGURE 6.2 SLAB STEP OPTIONS ON CLASS A OR CLASS S SITES

6.4.5 Retention of fill under slabs for Classes A, S and M sites

At the edge of a slab (or at a step) where more than 0.45 m of fill is retained, one of the following edge treatments shall be used:

(a) The fill up to a height of 750 mm shall be retained by a deepened edge beam structurally continuous with the slab and of not less than 200 mm width. If the fill is greater than 0.75 m but not more than 1.2 m in depth, vertical reinforcement of centrally placed SL82 mesh shall be provided. Where the height exceeds 1.2 m, the edge beam shall be designed by engineering principles.

(b) Where the fill is retained by a masonry wall, the following shall be satisfied:

(i) The methods of construction shall be as shown in Figure 6.3. Compaction of the fill shall be undertaken in a manner that does not cause damage to the wall.

It is recommended that clay fill be avoided; however, where used, it shall be placed in a moist condition.

(ii) For footing slabs on Class M sites, the slab and the footing shall be tied by N12 bars at 400 mm centres.

Licensed to Mrs Cathie Thompson on 17 September 2012. 1 user personal user licence only. Storage, distribution or use on network prohibited (10300097).

Licensed to Mrs Cathie Thompson on 17 September 2012. 1 user personal user licence only. Storage, distribution or use on network prohibited (10300097).

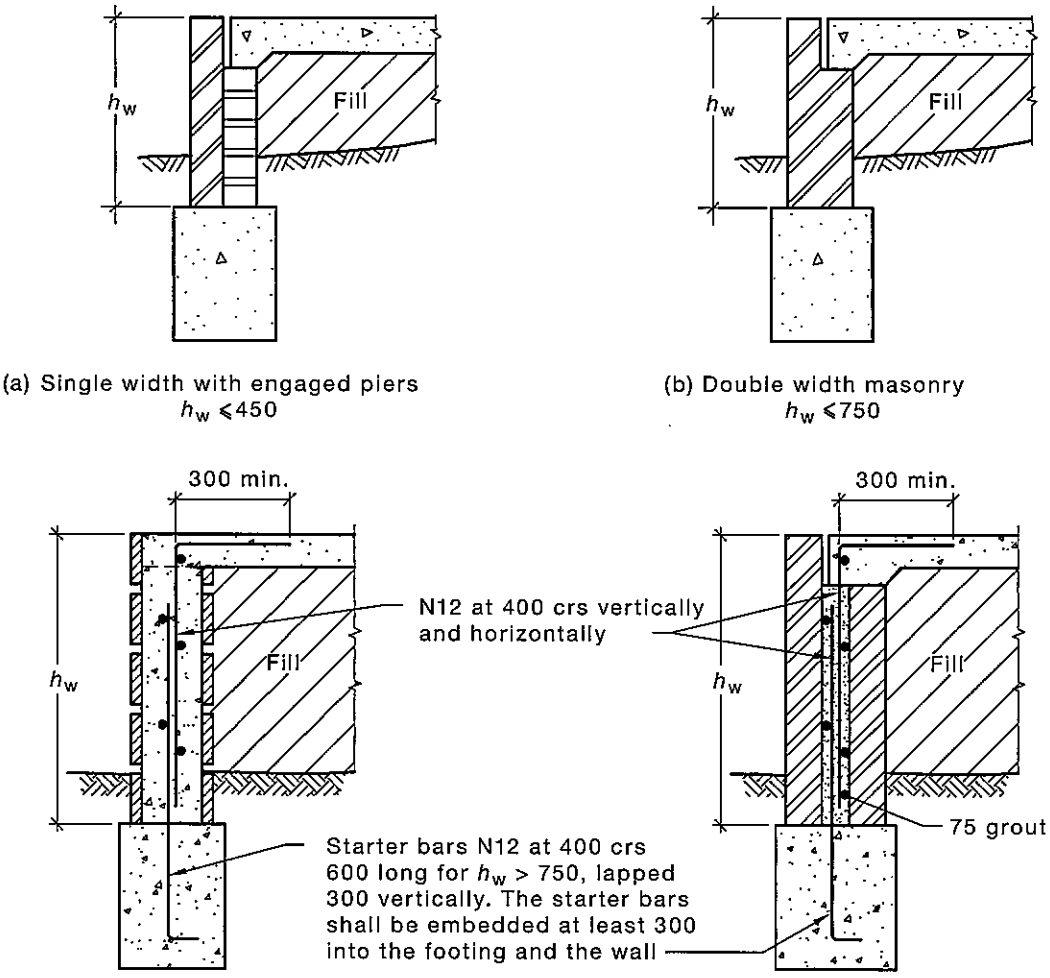

Wall height (h)	Wall construction
h_w < 450	Single width masonry with engaged piers at 1200 centres
$h_w \leq 750$	Double width masonry wall 230 thick. Solid or filled concrete block wall 200 nominal thickness
$h_w \leq 1\ 500$	Double width masonry with a 75 filled cavity or a 200 filled block wall reinforced with tied N12 bars at 400 spacing horizontally and vertically. For h_w > 750, the wall and footing shall be tied to the slab. Cavity filling shall be well compacted 20 MPa concrete or grout in accordance with AS 3700.
h_w > 1 500	Designed in accordance with engineering principles

LEGEND:

h_w = maximum height of masonry wall retaining structure

NOTE: Drainage provisions should be made.

DIMENSIONS IN MILLIMETRES

FIGURE 6.3 STRUCTURAL DETAILS FOR WALLS RETAINING NON-REACTIVE FILL UNDER SLAB

 © Standards Australia

Licensed to Mrs Cathie Thompson on 17 September 2012. 1 user personal user licence only. Storage, distribution or use on network prohibited (10300097).

6.4.6 Fixing of reinforcement and void formers

Reinforcement and void formers shall be fixed in position prior to concreting by means of proprietary spacers, bar chairs with bases, ligatures or other appropriate fixings so as to achieve the required reinforcement position and concrete covers. Reinforcement shall not be placed or located after concreting.

6.4.7 Placing, compaction and curing of concrete

The concrete shall be transported, placed, compacted and cured in accordance with good building practice.

6.5 CONSTRUCTION OF STRIP AND PAD FOOTINGS

6.5.1 General

The construction of strip and pad footings shall comply with Clause 6.5.2. For Class H1, Class H2 or Class E sites, additional requirements are given in Clause 6.6.

6.5.2 Foundation

For the strip and pad footing designs in Section 3, the foundation shall satisfy the following:

(a) The foundation shall have minimum bearing capacity of 100 kPa or the footing shall be founded on controlled sand fill on a Class A or Class S site.

(b) Topsoil containing grass roots shall be removed from the area on which the footing is to rest.

(c) On sandy sites or sites subject to wind or water erosion, the minimum depth below finished ground level of the underside of the footing shall be 300 mm.

(d) Trenches shall be dewatered and cleaned prior to concrete placement such that no significant softened or loosened material remains.

6.6 ADDITIONAL REQUIREMENTS FOR MODERATELY, HIGHLY AND EXTREMELY REACTIVE SITES

For stiffened rafts, waffle rafts, or strip footings on moderately, highly and extremely reactive sites, the following requirements apply to the building services and footing system in addition to the requirements of Clauses 6.4 and 6.5:

(a) Where the design of the footing system relies on particular detailing of masonry construction to minimize any damage caused by foundation movement, that detailing shall be included on the drawings.

(b) Penetrations of the edge beam and footing by drain pipes shall be sleeved using closed-cell polyethylene lagging or similar.

(c) During construction, water run-off shall be collected and channelled away from the building.

(d) Excavations near the edge of the footing system shall be backfilled in such a way as to prevent access of water to the foundation as described in Clause 5.6.3(b).

NOTES:

1 For example, excavations should be backfilled above or adjacent to the footing with moist clay compacted by hand-rodding or tamping.

2 Porous material such as sand, gravel or building rubble should not be used.

(e) Water shall not be allowed to pond in the trenches.

For slab or strip footings on highly and extremely reactive sites, the following requirements apply:

(i) Drains attached to or emerging from underneath the building shall incorporate flexible joints immediately outside the footing and commencing within 1 m of the building perimeter to accommodate a total range of differential movement in any direction equal to the estimated characteristic surface movement of the site (y_s). In the absence of specific design requirements, the fittings or other devices that are provided to allow for the movement shall be set at the mid position of their range of possible movement at the time of installation, so as to allow for movement equal to $0.5y_s$ in any direction from the initial setting. This requirement applies to all stormwater and sanitary plumbing drains and discharge pipes.

(ii) Concrete in beams shall be mechanically vibrated.

Licensed to Mrs Cathie Thompson on 17 September 2012. 1 user personal user licence only. Storage, distribution or use on network prohibited (10300097).

 © Standards Australia